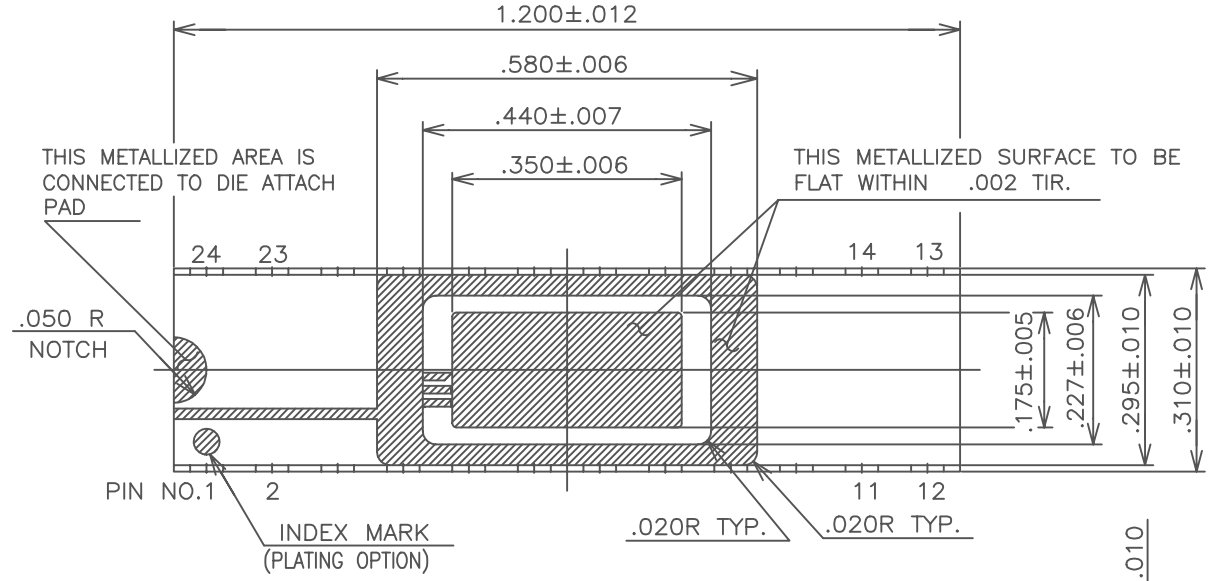

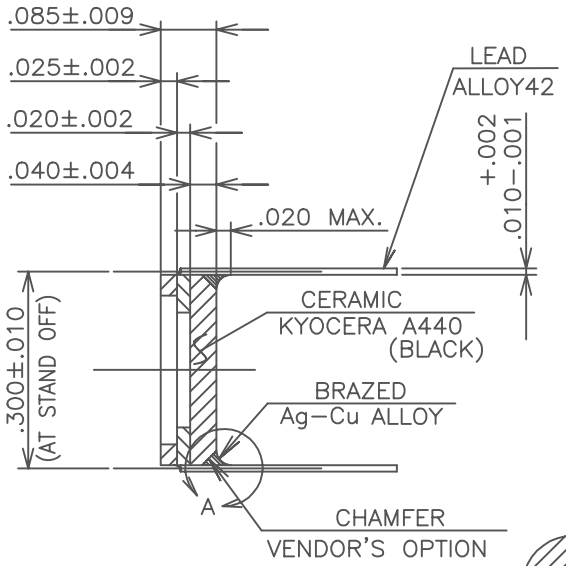

DETAIL−A

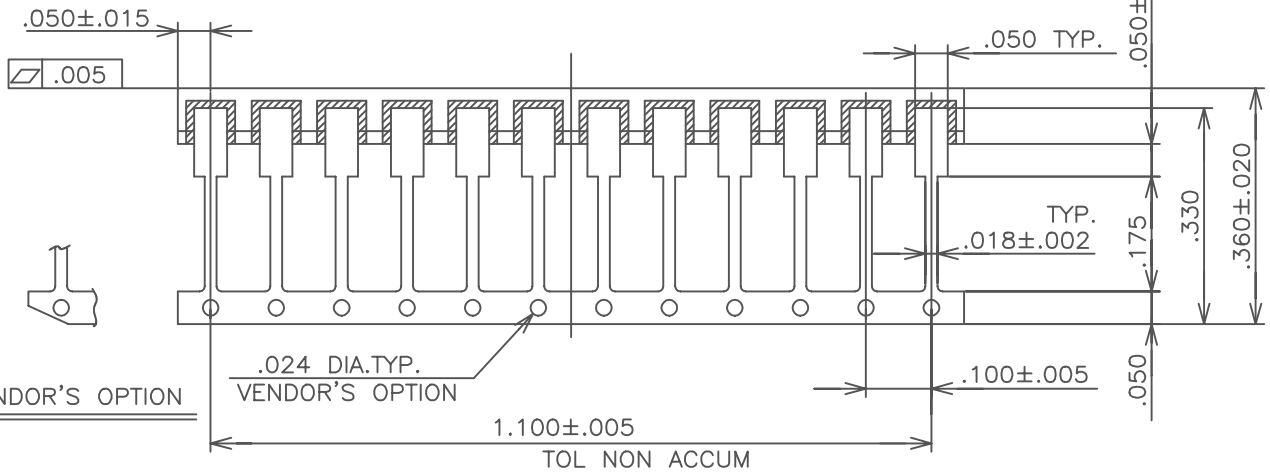

VENDOR'S OPTION

NOTES:
1. PLATING THICKNESS TO BE PER CUSTOMER'S SPECIFICATION.
2. SEAL AREA TO BE METALLIZED.
3. DIE ATTACH AREA TO BE METALLIZED.
4. SEAL RING AND DIE ATTACH PAD TO BE FLOATING FROM ANY PINS.
5. LEAD RESISTANCE : 0.30 OHM MAX.

MODIFICATION					
	ADDED : SHEET(2/2)				
C	REDRAWN : CONVERTED CAD DATA	OCT.22.'98	Y.M	SH.K/S.F	T.A
	CHANGED	DATE	DRAWN	CHECKED	APPROVED

NAME: 24 LEAD SIDE BRAZED PACKAGE

SCALE 5/1

MATERIAL: AS INDICATED

TOLERANCE UNLESS OTHERWISE SPECIFIED ±.005 THIRD ANGLE PROJECTION

KYOCERA

KYOCERA CORPORATION KYOTO JAPAN

SB024K160−1 S=0 D=0

DRAWN	CHECKED	APPROVED	DATE
H.K	K.M		APR.14.'80

DRAWING NO. KD−80160−C

SHEET 1/2

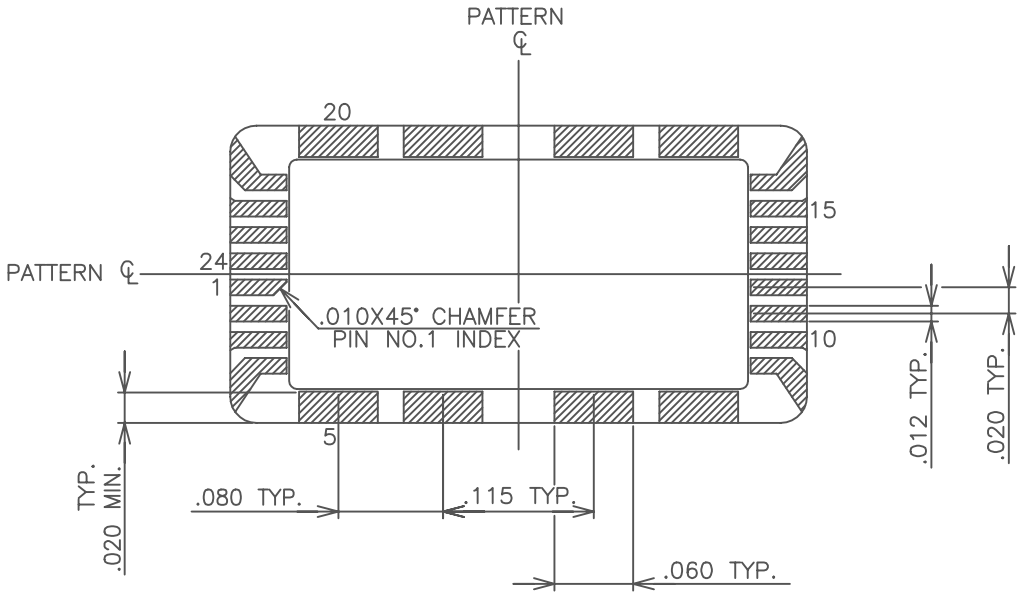

BONDING PATTERN

MODIFICATION					
	CHANGED	DATE	DRAWN	CHECKED	APPROVED

NAME	TOLERANCE	DRAWN	CHECKED	APPROVED	DATE
24 LEAD SIDE BRAZED PACKAGE	UNLESS OTHERWISE SPECIFIED	Y.M	SH.K/S.F	T.A	OCT.22.'98
SCALE 10/1 — MATERIAL	THIRD ANGLE PROJECTION				
KYOCERA — KYOCERA CORPORATION KYOTO JAPAN		DRAWING NO. KD-80160-C			SHEET 2/2