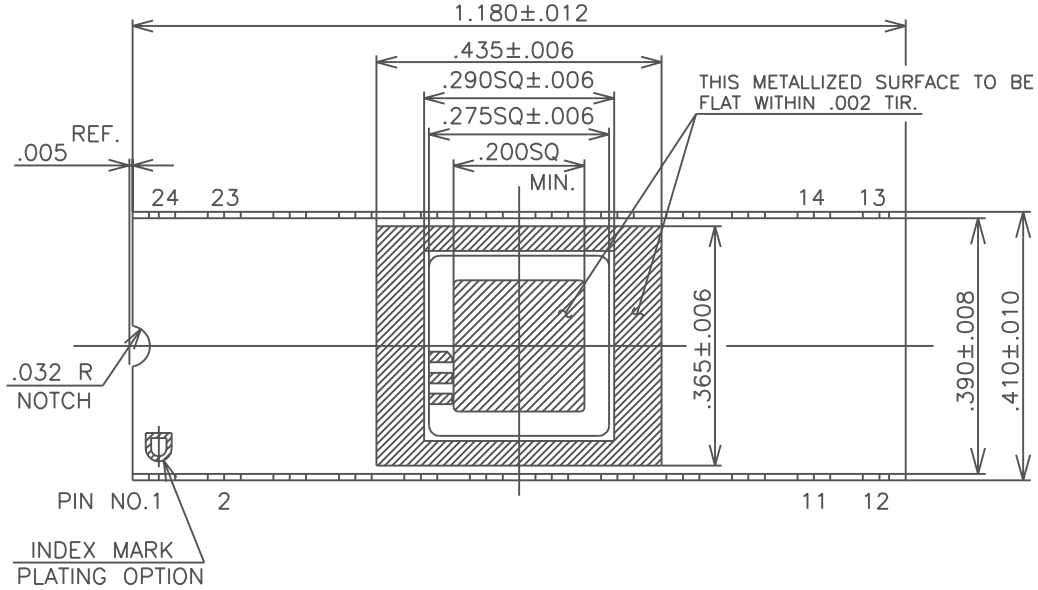

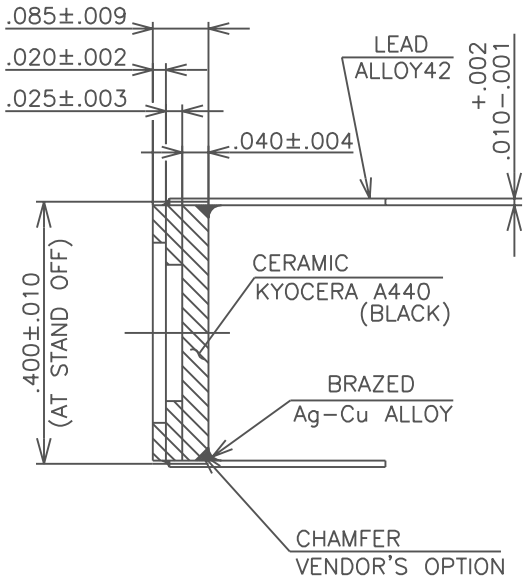

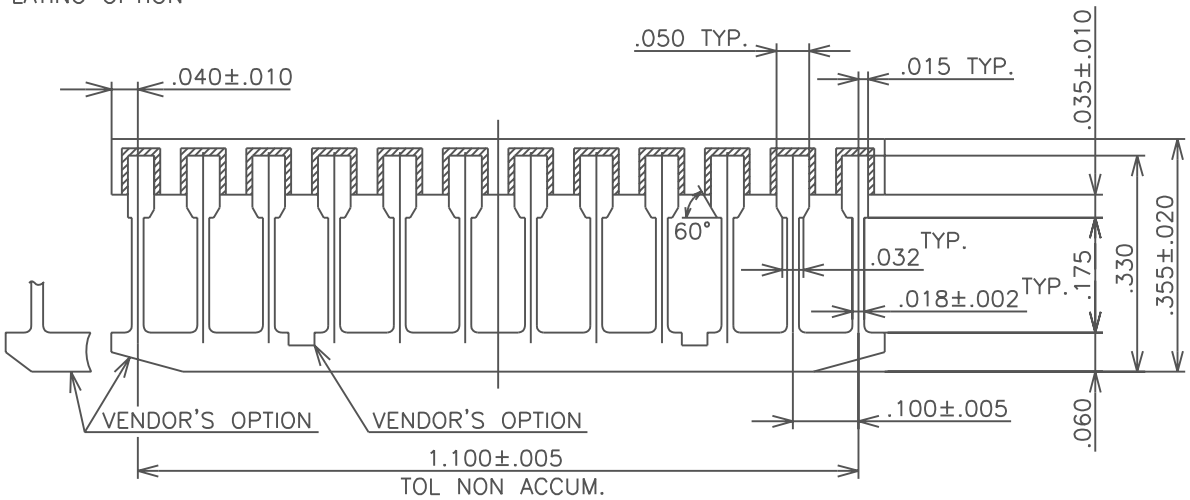

NOTES:

1. PLATING THICKNESS TO BE PER CUSTOMER'S SPECIFICATION.
2. LEAD RESISTANCE : W/B NO.12,24 --- 0.1 OHM MAX.
   OTHERS --- 0.25 OHM MAX.
3. SEAL AREA TO BE METALLIZED.
4. DIE ATTACH AREA TO BE METALLIZED.
5. SEAL RING AND DIE ATTACH PAD TO BE FLOATING FROM ANY PINS.

SB024N594−1 S=0 D=0

MODIFICATION					
	ADDED : SHEET NO. 2/2				
B	REDRAWN : CONVERTED CAD DATA.	JAN.22.'01	T.S/H.K	H.TA/S.NI	H.SA
	CHANGED	DATE	DRAWN	CHECKED	APPROVED

NAME	TOLERANCE UNLESS OTHERWISE SPECIFIED	DRAWN	CHECKED	APPROVED	DATE
24 LEAD SIDE BRAZED PACKAGE	±.005 THIRD ANGLE PROJECTION	K.I	K.M		OCT.21.'83
SCALE 5/1 MATERIAL AS INDICATED					

KYOCERA

KYOCERA CORPORATION KYOTO JAPAN

DRAWING NO. KD−S83594−B

SHEET 1/2

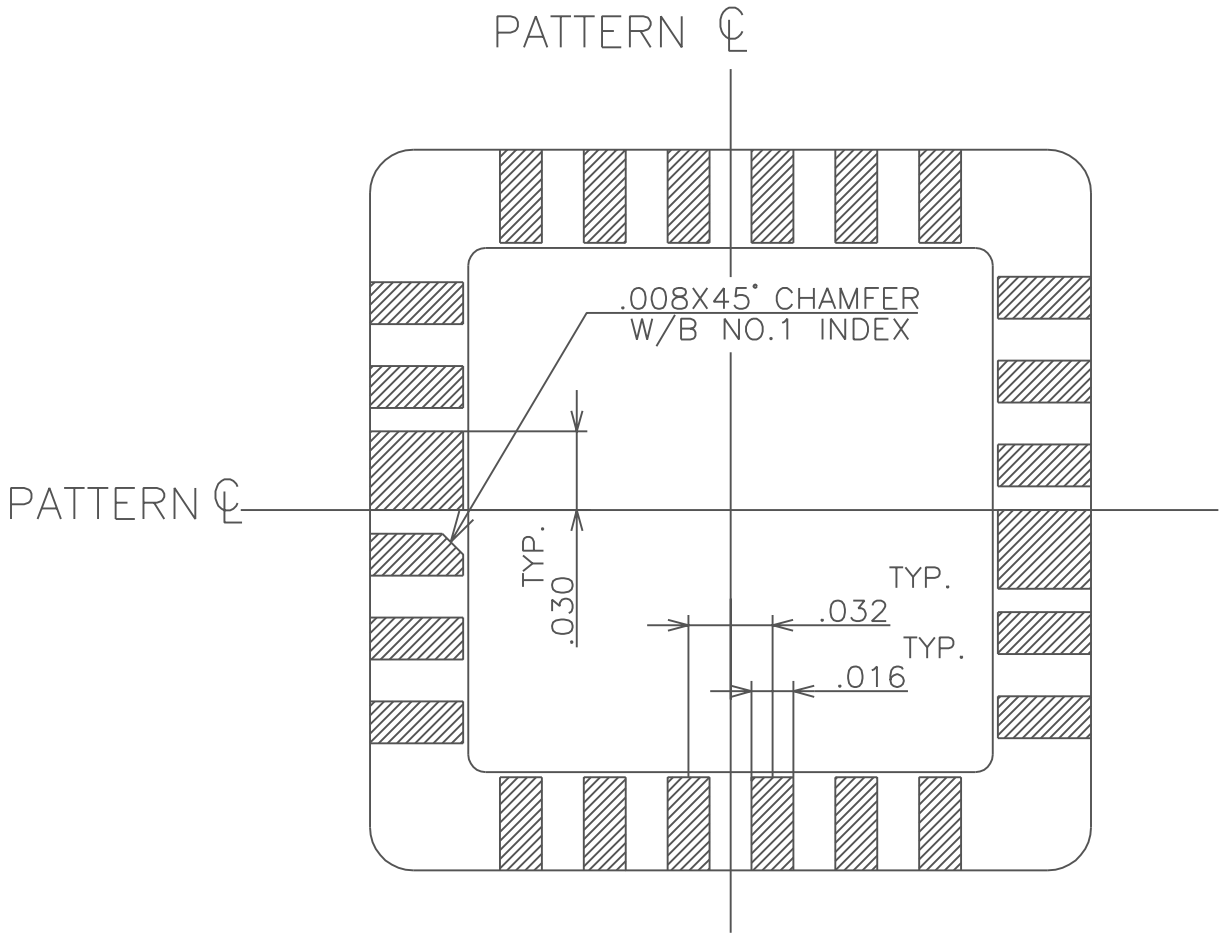

BONDING PATTERN

MODIFICATION					
	CHANGED	DATE	DRAWN	CHECKED	APPROVED

NAME 24 LEAD SIDE BRAZED PACKAGE		TOLERANCE UNLESS OTHERWISE SPECIFIED — THIRD ANGLE PROJECTION	DRAWN	CHECKED	APPROVED	DATE
SCALE 20/1	MATERIAL —		K.I	K.M		OCT.21.'83
KYOCERA	KYOCERA CORPORATION KYOTO JAPAN		DRAWING NO. KD-S83594-B			SHEET 2/2