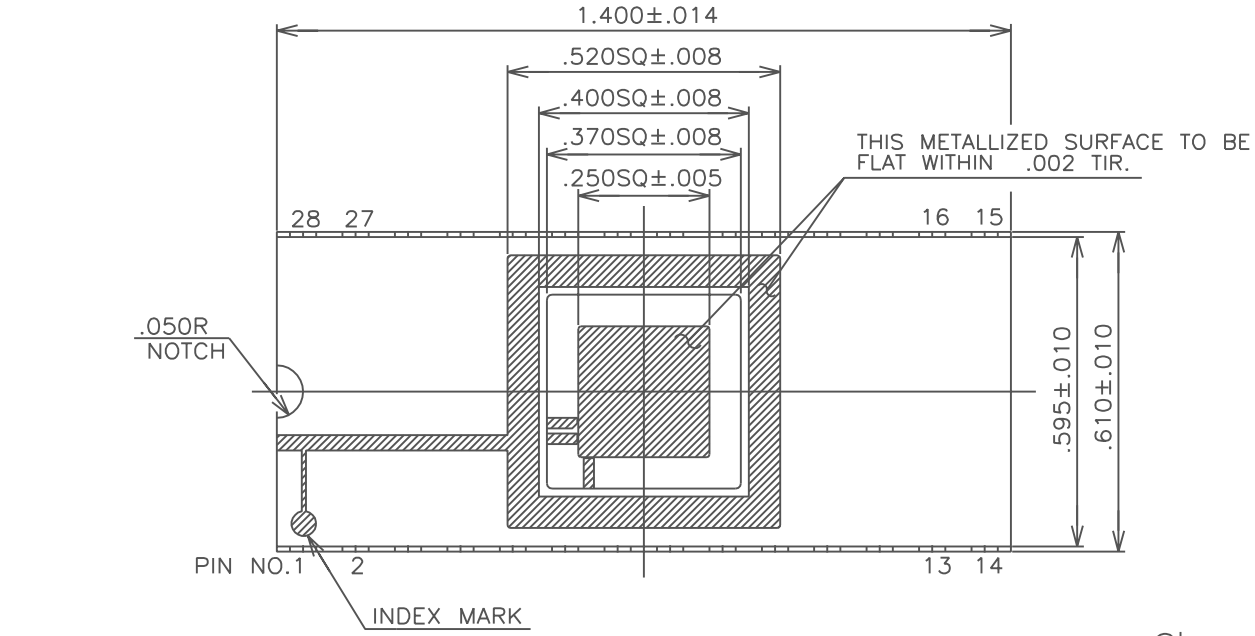

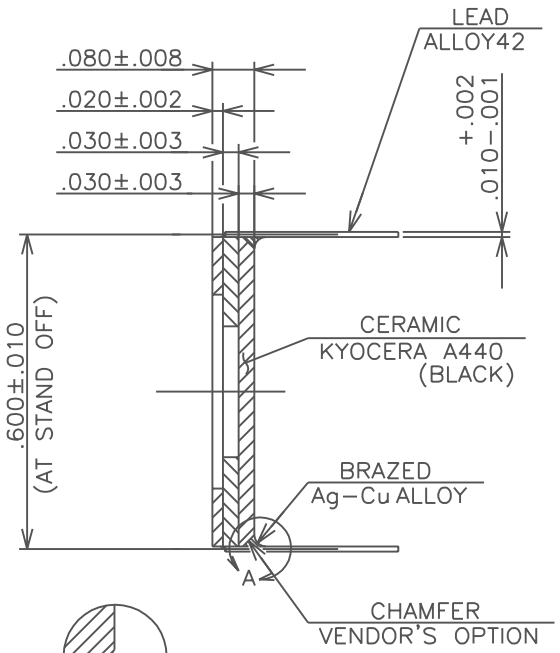

DETAIL−A

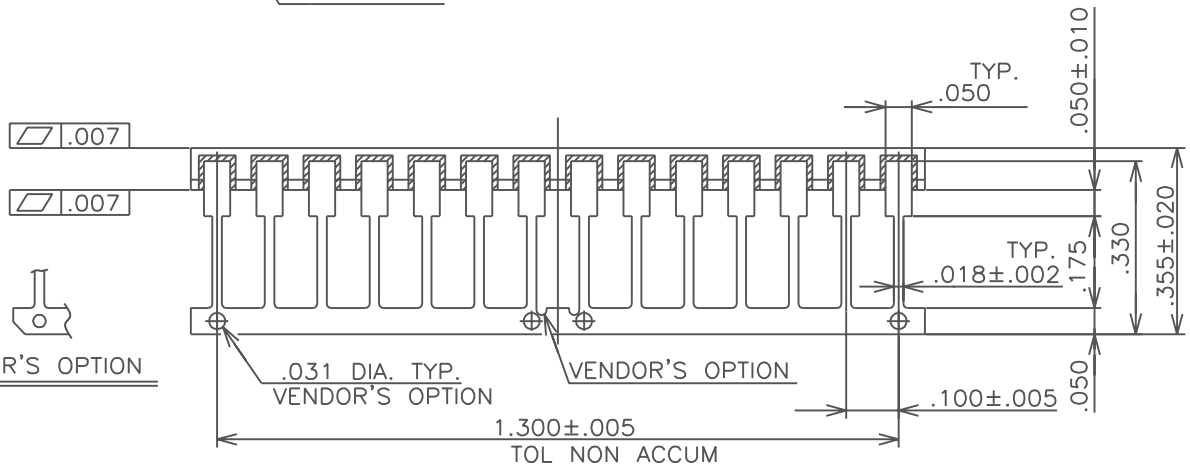

VENDOR'S OPTION

NOTES

1. PLATING THICKNESS TO BE PER CUSTOMER'S SPECIFICATION.
2. SEAL AREA TO BE METALLIZED.
3. DIE ATTACH AREA TO BE METALLIZED.
4. SEAL RING AND DIE ATTACH TO BE FLOATING FROM ANY PINS.
5. LEAD RESISTANCE: 0.35 OHM MAX.

MODIFICATION					
	CHANGED	DATE	DRAWN	CHECKED	APPROVED

NAME: 28 LEAD SIDE BRAZED PACKAGE

SCALE: 4/1

MATERIAL: AS INDICATED

TOLERANCE UNLESS OTHERWISE SPECIFIED: ±.005 THIRD ANGLE PROJECTION

KYOCERA CORPORATION KYOTO JAPAN

SB028AG327−1 S=0 D=0

DRAWN	CHECKED	APPROVED	DATE
Y.M	M.K/S.F	T.A	MAR.4.'98

DRAWING NO. KD−S98327

SHEET 1/2

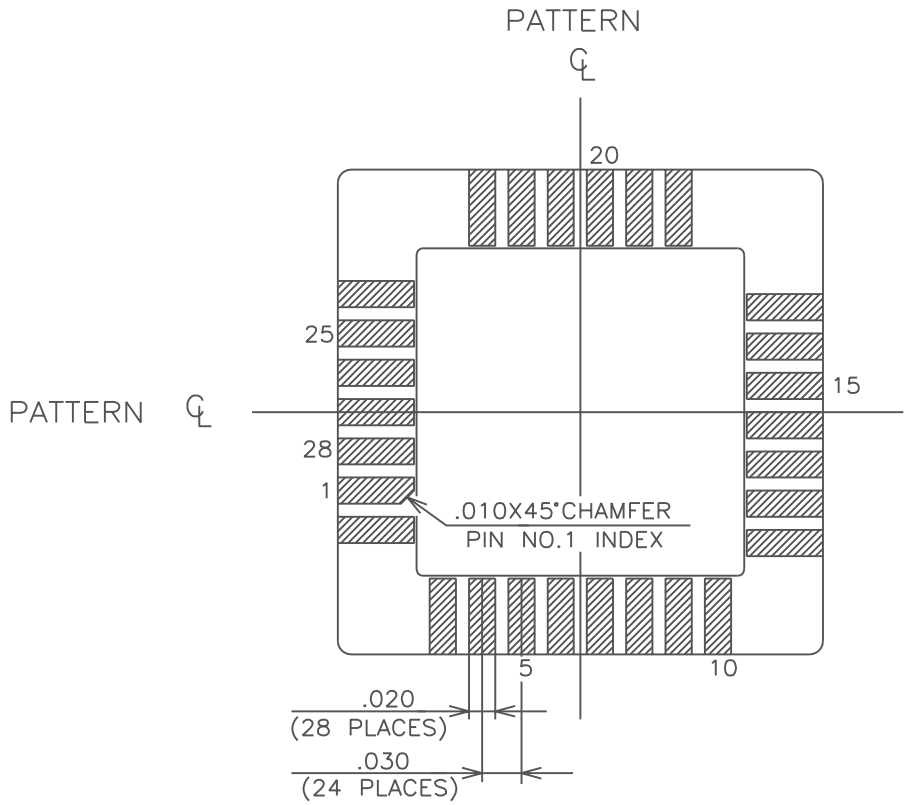

BONDING PATTERN

MODIFICATION					
	CHANGED	DATE	DRAWN	CHECKED	APPROVED

NAME 28 LEAD SIDE BRAZED PACKAGE		TOLERANCE UNLESS OTHERWISE SPECIFIED	DRAWN	CHECKED	APPROVED	DATE
			Y.M	M.K/S.F	T.A	MAR.4.'98
SCALE 10/1	MATERIAL	THIRD ANGLE PROJECTION				
KYOCERA	KYOCERA CORPORATION KYOTO JAPAN		DRAWING NO. KD-S98327			SHEET 2/2