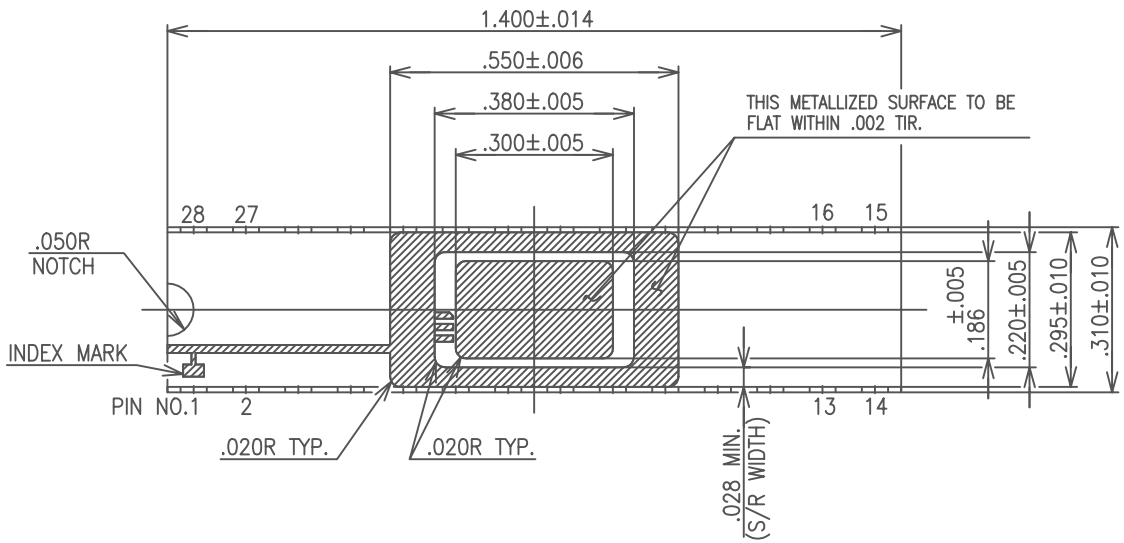

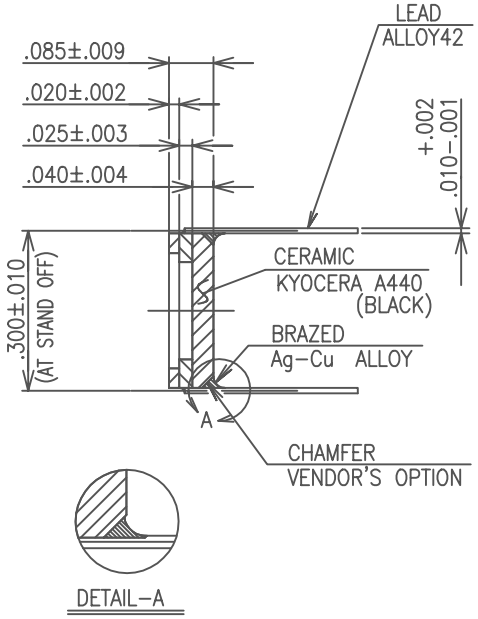

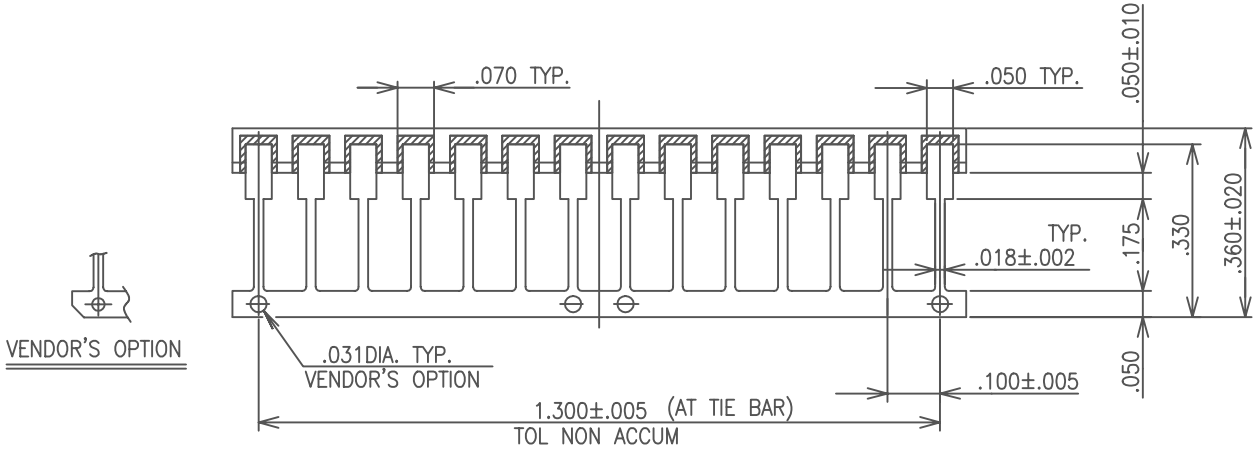

NOTES

1. PLATING THICKNESS TO BE PER CUSTOMER'S SPECIFICATION.
2. SEAL AREA TO BE METALLIZED.
3. DIE ATTACH AREA TO BE METALLIZED.
4. SEAL RING AND DIE ATTACH PAD TO BE FLOATING FROM ANY PINS.
5. LEAD RESISTANCE : 0.40 OHMS MAX.

MODIFICATION					
	CHANGED	DATE	DRAWN	CHECKED	APPROVED

NAME 28 LEAD SIDE BRAZED PACKAGE		TOLERANCE UNLESS OTHERWISE SPECIFIED ±.005 THIRD ANGLE PROJECTION	SB028AD025−1	S=0 D=0
SCALE 4/1	MATERIAL AS INDICATED		DRAWN S.SH / CHECKED H.S/S.F / APPROVED T.A / DATE JAN.13.'95	
KYOCERA	KYOCERA CORPORATION KYOTO JAPAN		DRAWING NO. KD−S95025	SHEET 1/2

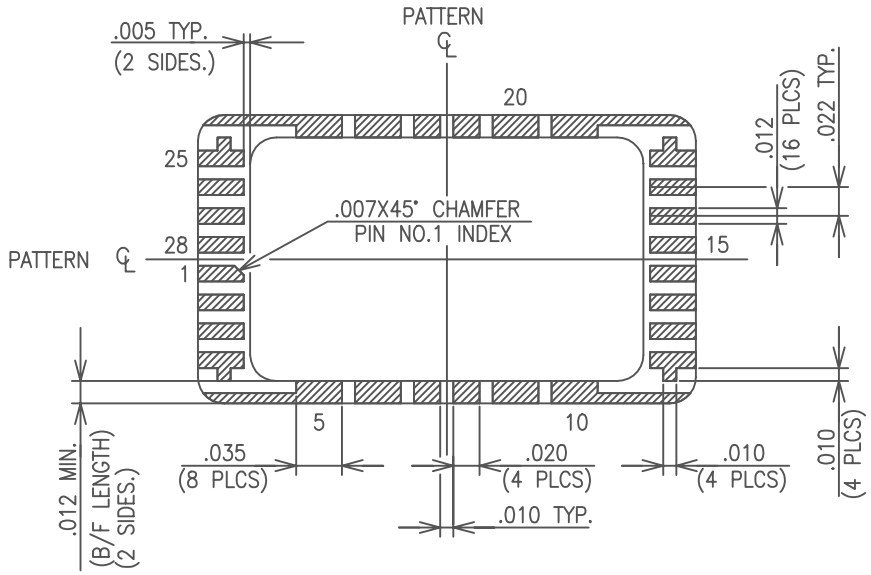

BONDING PATTERN

MODIFICATION						NAME	TOLERANCE	DRAWN	CHECKED	APPROVED	DATE
						28 LEAD SIDE BRAZED PACKAGE	UNLESS OTHERWISE SPECIFIED	S.SH	H.S/S.F	T.A	JAN.13.'95
						SCALE 10/1 / MATERIAL	THIRD ANGLE PROJECTION				
	CHANGED	DATE	DRAWN	CHECKED	APPROVED	KYOCERA	KYOCERA CORPORATION KYOTO JAPAN	DRAWING NO. KD-S95025			SHEET 2/2