CSB03220 (EXCESS)

CSB03221

NTK TECHNICAL CERAMICS

LATEST REVISION'S DISCRIPTION

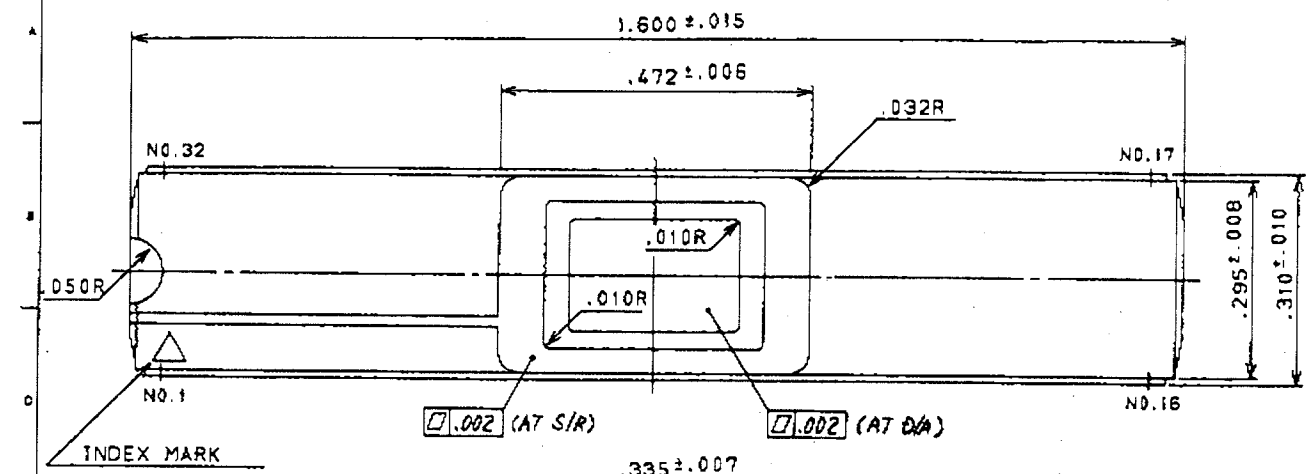

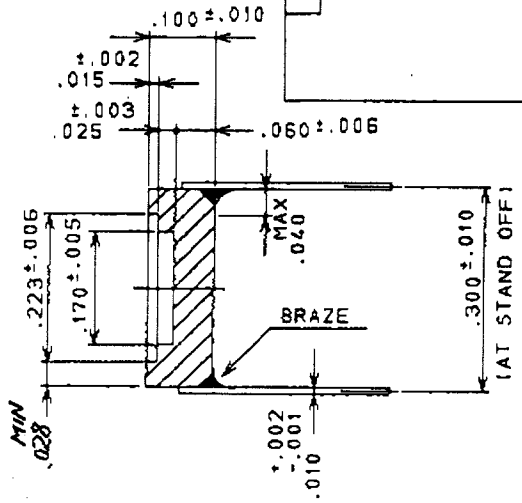

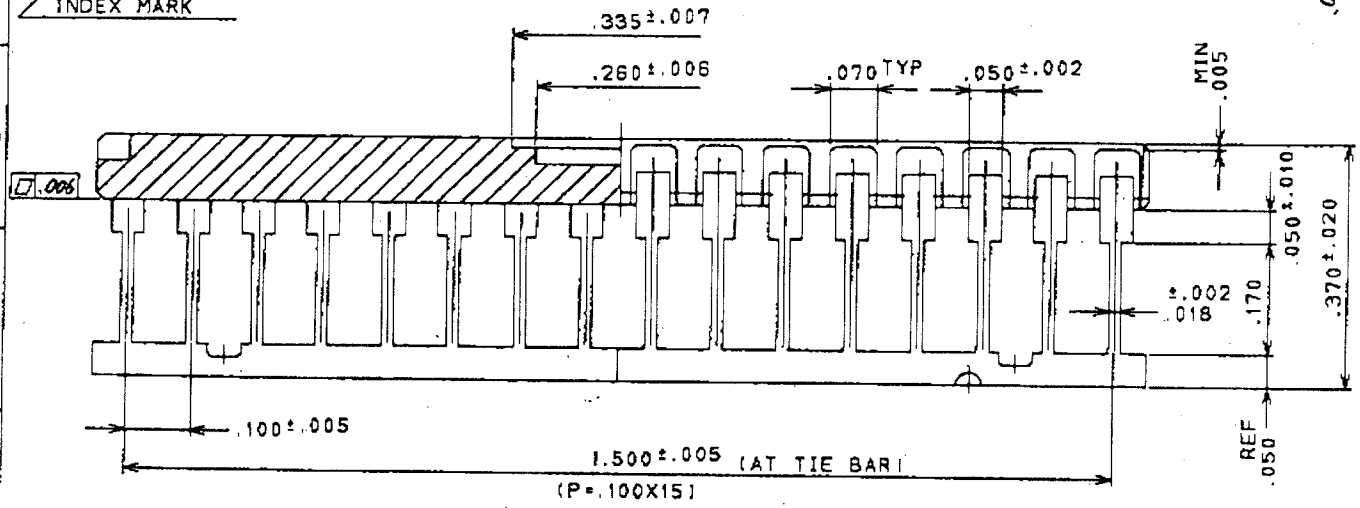

NOTES

1. GOLD PLATE 60μ INCHES MIN OVER 80μ INCHES MIN NICKEL.
2. NO LEAD TO BE ELECTRICALLY CONNEC TO THE DIE ATTACH PAD.

   SEAL RING ISOLATED.
3. I.D.T SPEC MSC-0100 SHALL APPLY.
4. LEAD RESISTANCE : 450 mΩ MAX

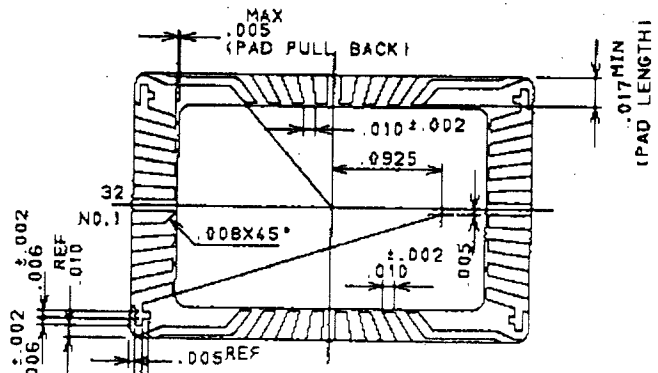

B/G PAD DETAIL

NTK TECHNICAL CERAMIC DIVISION NOV. 20. 1989 NGK SPARK PLUG CO.,LTD.

3			
2	LEAD	ALLOY42	
1	CERAMIC	BLACK ALUMINA	
Item	Name	Material	Description

VALUES DIMENSIONS SPECIFIED TOLERANCES: ± 1% K. L. T. 2 DECIMALS .XX ±.01 3 DECIMALS .XXX ±.005	DRAWN H.OHIKE
	CHECKED
	APPROVED
	UNIT INCH
	SCALE 1/1

Rev.	Description
0	NEW DRAWING

NTK TECHNICAL CERA NGK SPARK PLUG CO.,L

TITLE 32 LEAD S/8 PK

DWG NO. IDK32F1-6395A

SHEET OF

MODIFIED DWG NO. IDK32F1-6341A

No.9710 P.2/4
Mar.30. 2000 3:56PM