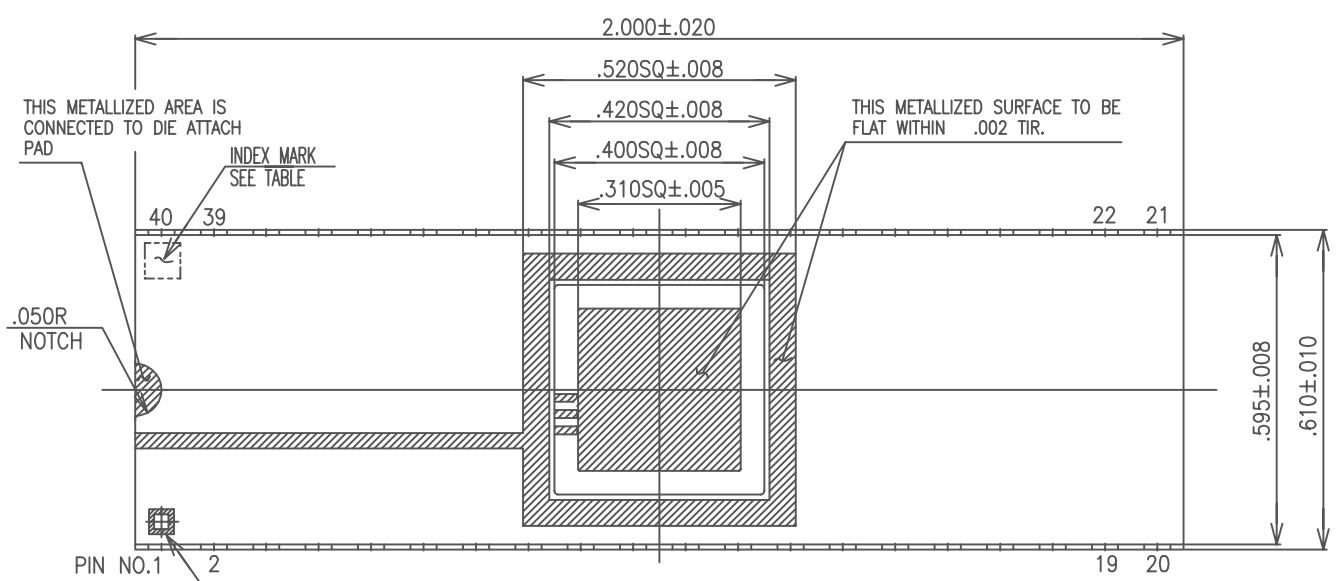

PART NO.	INDEX MARK	LEAD TIED DOWN
01	WITHOUT	NIL
02	1	NO.1 ONLY
03	40	NO.40 ONLY

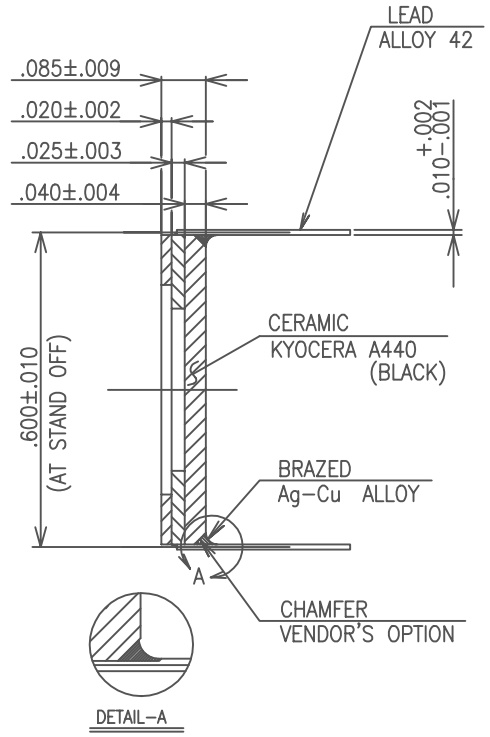

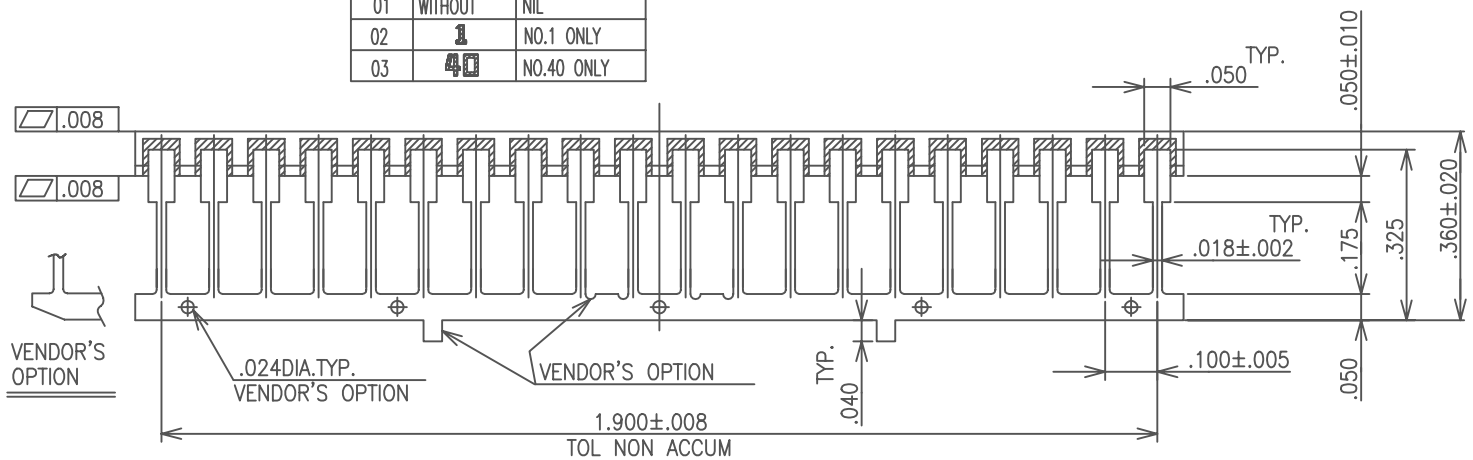

NOTES
1. PLATING THICKNESS TO BE PER CUSTOMER'S SPECIFICATION.
2. SEAL AREA TO BE METALLIZED.
3. DIE ATTACH AREA TO BE METALLIZED.
4. LEAD RESISTANCE : 0.50 OHM MAX.

SB0401163-3	S=0 D=40
SB0401163-2	S=1 D=1
SB0401163-1	S=0 D=0

MODIFICATION					
D	REDRAWN (CONVERTED CAD DATA)	SEP.08.'93	H.SH	H.SU / S.F	T.A
	CHANGED	DATE	DRAWN	CHECKED	APPROVED

NAME: 40 LEAD SIDE BRAZED PACKAGE

SCALE 4/1

MATERIAL AS INDICATED

TOLERANCE UNLESS OTHERWISE SPECIFIED ±.005 THIRD ANGLE PROJECTION

DRAWN	CHECKED	APPROVED	DATE
T.A	K.M		MAY.8.'78

KYOCERA

KYOCERA CORPORATION KYOTO JAPAN

DRAWING NO. KD−78163−D

SHEET 1/2

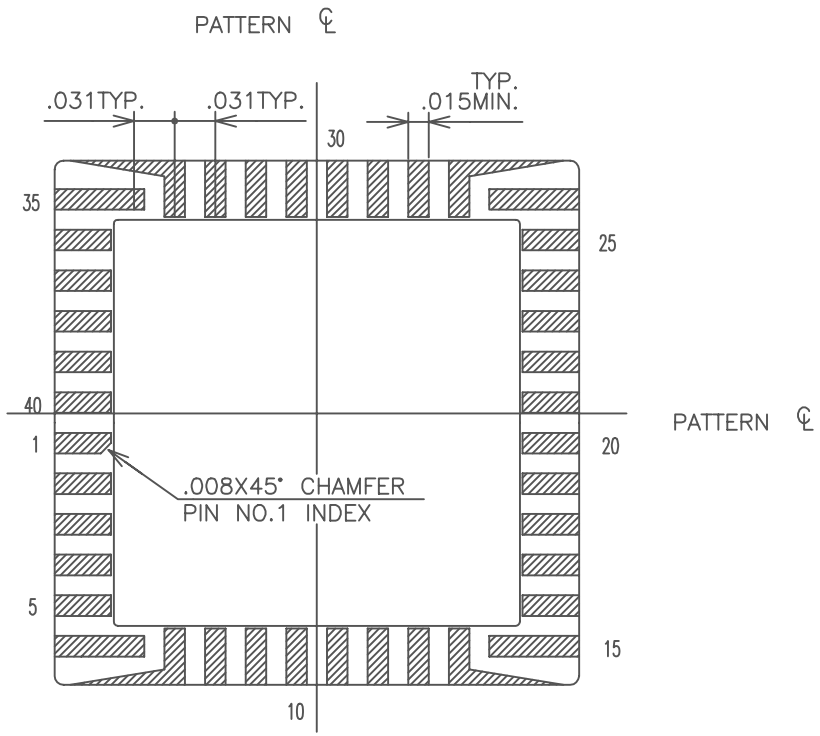

BONDING PATTERN

MODIFICATION													
							NAME 40 LEAD SIDE BRAZED PACKAGE	TOLERANCE UNLESS OTHERWISE SPECIFIED	DRAWN	CHECKED	APPROVED	DATE
									K.I	K.M		MAY.8.'78
							SCALE 10/1	MATERIAL ———	THIRD ANGLE PROJECTION			
	D	REDRAWN (CONVERTED CAD DATA)	SEP.08.'93	H.SH	H.SU/S.F	T.A	KYOCERA	KYOCERA CORPORATION KYOTO JAPAN	DRAWING NO. KD-78163-D			SHEET 2/2
		CHANGED	DATE	DRAWN	CHECKED	APPROVED						