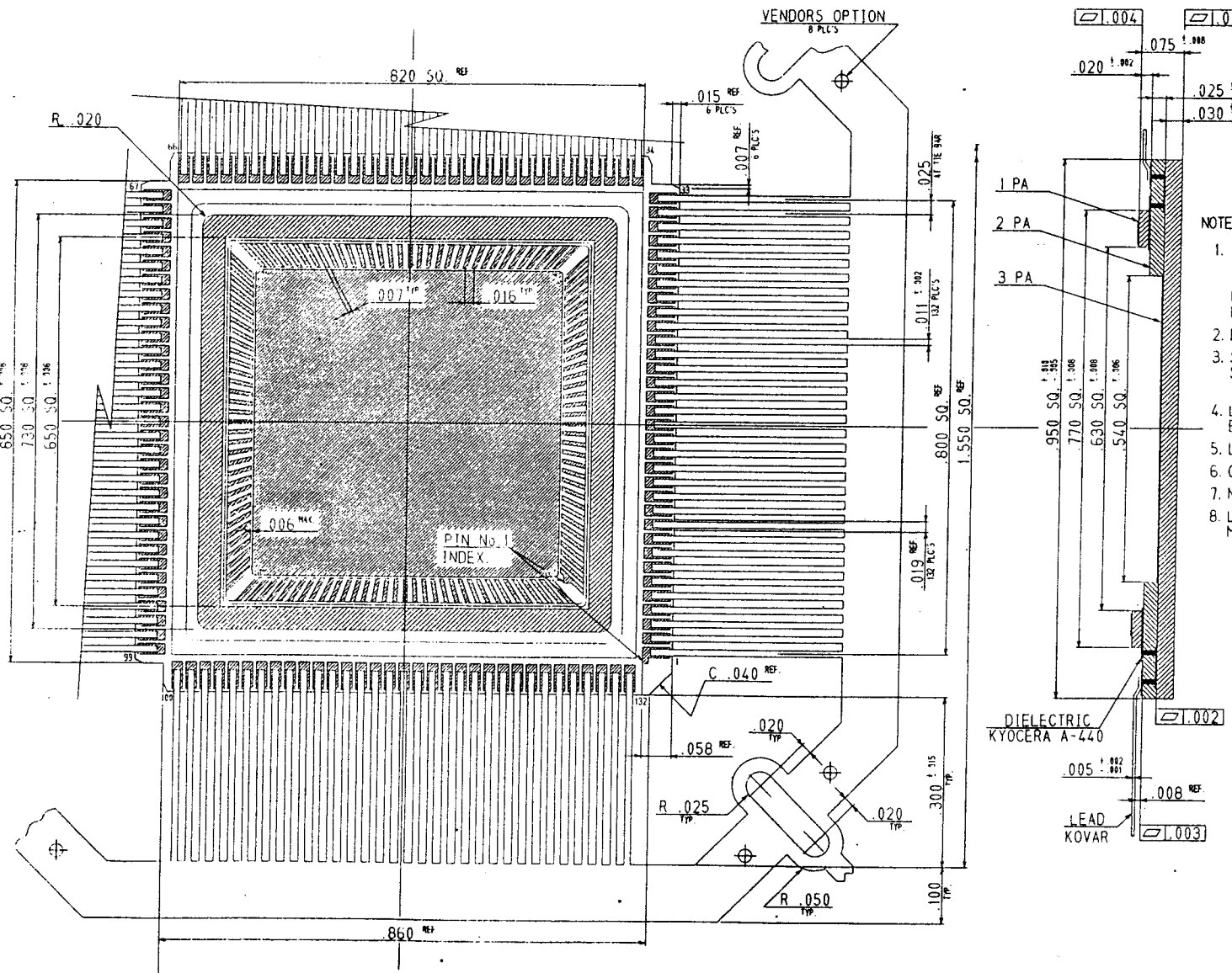

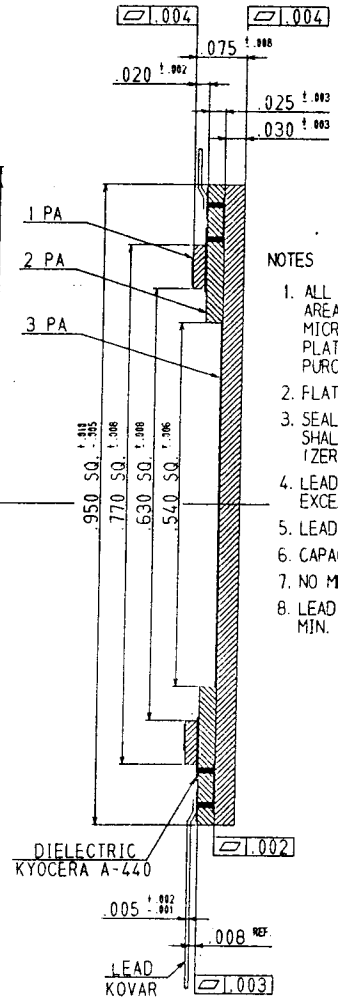

NOTES

1. ALL EXPOSED METAL AND METALLIZED AREA SHALL BE GOLD PLATED 60 MICRO INCHES MIN. THK. OVER NICKEL PLATED UNLESS OTHERWISE SPECIFIED PURCHASE ORDER.
2. FLATNESS METALLIZED PADS ONLY.
3. SEAL AREA AND DIE ATTACH AREA SHALL BE ISOLATED FROM ANY LEADS. (ZERO GROUND)
4. LEAD TO LEAD LEAKAGE SHALL NOT EXCEED 10 NANO AMPS AT 100V D.C.
5. LEAD RESISTANCE : 1.0 OHM MAX.
6. CAPACITANCE : 3.0PF MAX. 1000HZ.
7. NO METALLIZATION ON BACK SIDE.
8. LEAD PULL STRENGTH TO BE 0.5 LBS MIN. PERPENDICULAR PULL.

S-0
D=0

MODIFICATIONS					
	CHANGE	DATE	DRAWN	CHECKED	APPROVED

NAME: 132 LEAD FLAT PKG (.64050 CAV.)

SCALE: 8/1

MATERIAL: KYOCERA A-440

TOLERANCES: UNLESS OTHERWISE SPECIFIED ±.005 THIRD ANGLE PROJECTION

KYOCERA

KYOCERA CORPORATION
KYOTO JAPAN

DRAWN	CHECKED	APPROVED	DATE
T.T	M.M	Y-S	5-30-'88

PA0-132F2

DRAWING NO. PB-F88293

SHEET 1/2

(PB-F87491 MOD)

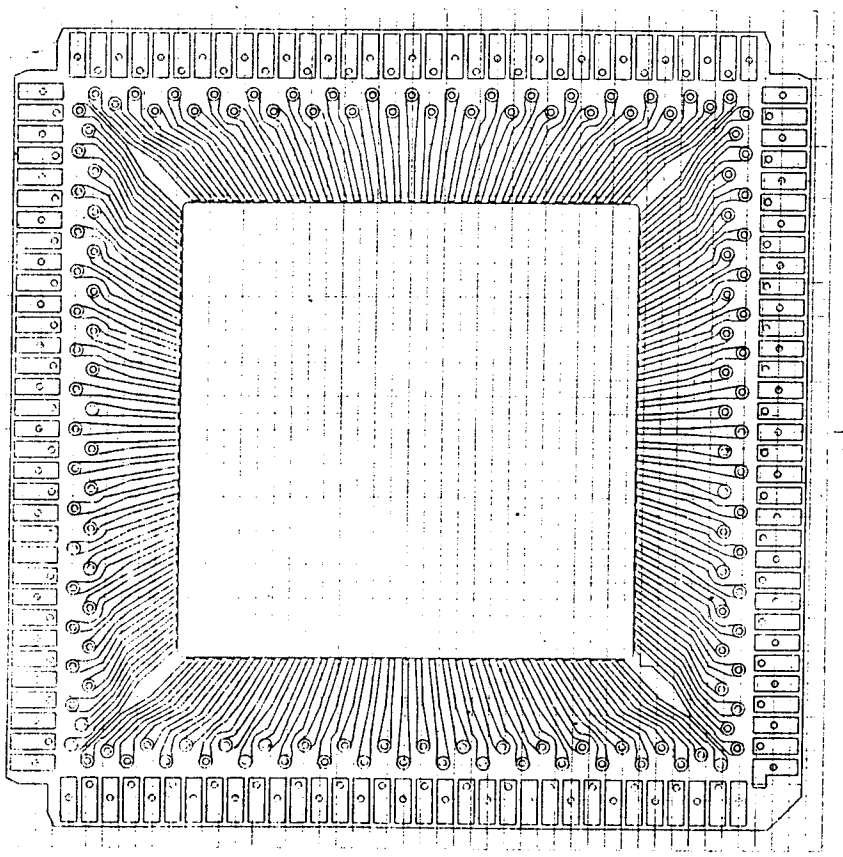

2 PA

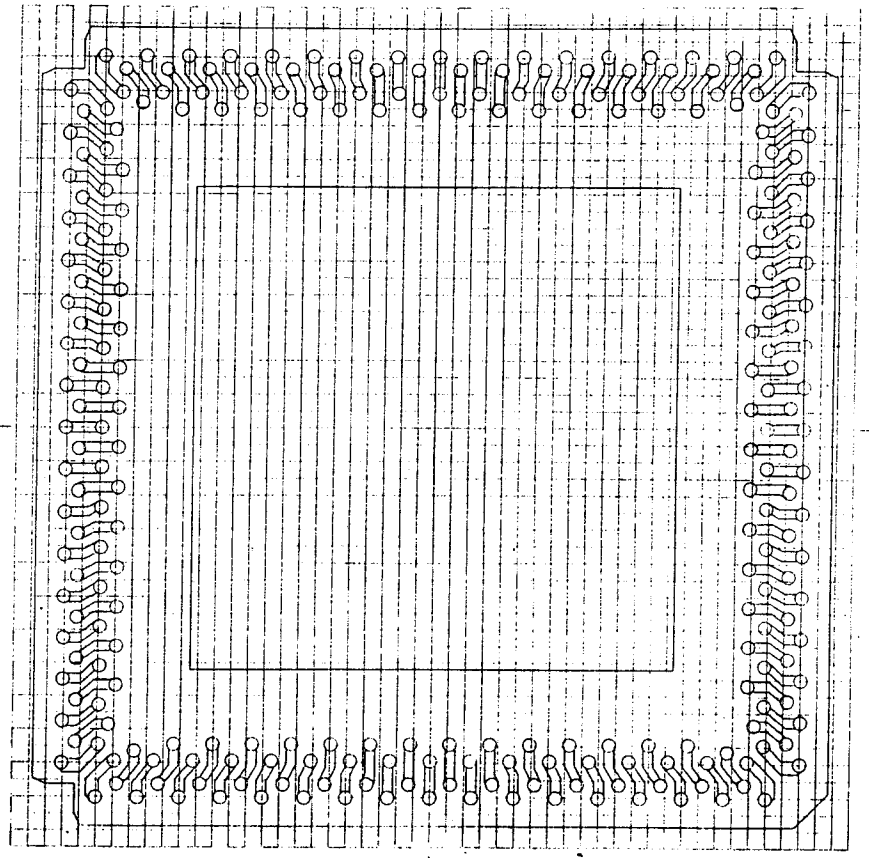

3 PA

.020/1 GRID

MODIFICATIONS					
	CHANGE	DATE	DRAWN	CHECKED	APPROVED

NAME: 132 LEAD FLAT PKG (.456 SQ. CAV.)

SCALE 10 / 1

MATERIAL

TOLERANCES: UNLESS OTHERWISE SPECIFIED

THIRD ANGLE PROJECTION

KYOCERA

KYOCERA CORPORATION
KYOTO JAPAN

DRAWN	CHECKED	APPROVED	DATE
T-T-	M-M	Y-S	5-30-'88

DRAWING NO. PB-F88293

SHEET 2/2

(PB-F87491 MOD)