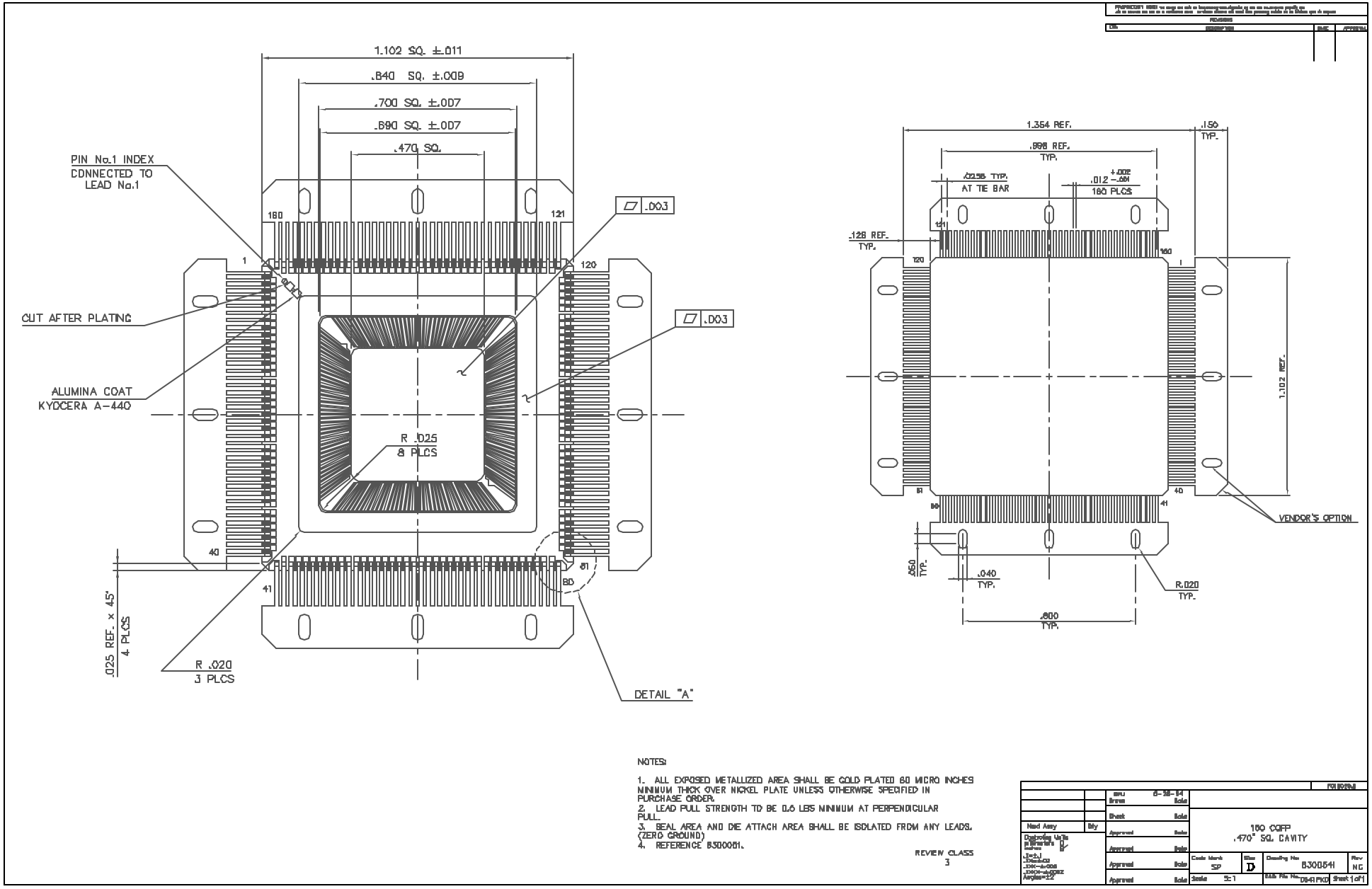

NOTES:

1. ALL EXPOSED METALLIZED AREA SHALL BE GOLD PLATED 60 MICRO INCHES MINIMUM THICK OVER NICKEL PLATE UNLESS OTHERWISE SPECIFIED IN PURCHASE ORDER.
2. LEAD PULL STRENGTH TO BE 0.6 LBS MINIMUM AT PERPENDICULAR PULL.
3. SEAL AREA AND DIE ATTACH AREA SHALL BE ISOLATED FROM ANY LEADS. (ZERO GROUND)
4. REFERENCE 8300051.

REVIEW CLASS
3

Next Assy	Qty		160 CQFP .470" SQ. CAVITY
Drawing Units		Code Mark SP	Size D
Angles=±2		Scale 5:1	Drawing No. 8300541 Rev NC
			CAD File No. D541FKD Sheet 1 of 1

SPECTRUM SEMICONDUCTOR MATERIALS, INC.
www.spectrum-semi.com Phone: 408.435.5555 Fax: 408.435.8226

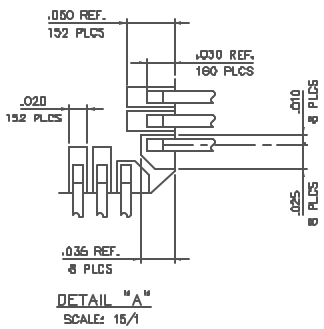

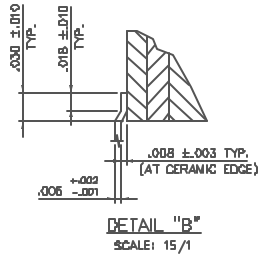

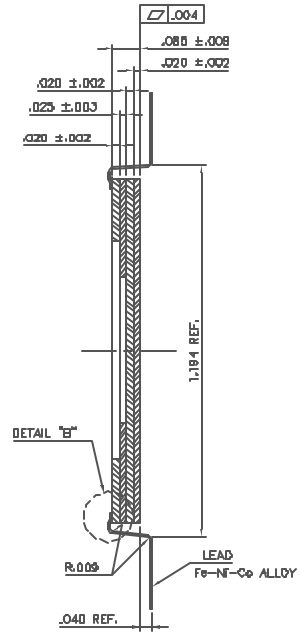

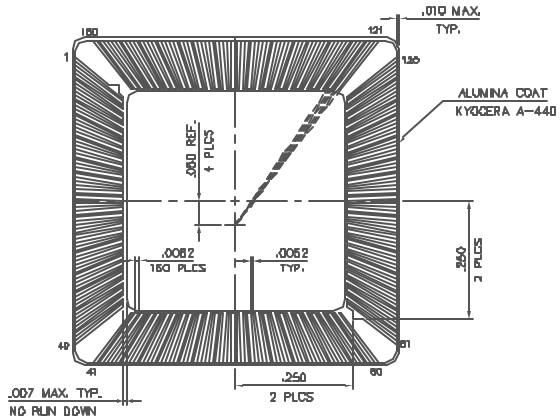

NOTES:

1. ALL EXPOSED METALLIZED AREA SHALL BE GOLD PLATED 50 MICRO INCHES MINIMUM THICK OVER NICKEL PLATE UNLESS OTHERWISE SPECIFIED IN PURCHASE ORDER.
2. LEAD PULL STRENGTH TO BE 0.5 LBS MINIMUM AT PERPENDICULAR PULL.
3. SEAL AREA AND DIE ATTACH AREA SHALL BE ISOLATED FROM ANY LEADS. (ZERO GROUND)
4. REFERENCE 8300051.

REVIEW CLASS
3

Next Assy	Qty	DWN 6-28-94	160 CQFP .470" SQ. CAVITY
Contouring Order		Check	
		Approved	
		Approved	
		Approved	
		Approved	
Code Ident SP	Size D	Drawing No 8300541	Rev NC
Scale 5:1		CAD File No 0541PKG	Sheet 1 of 1