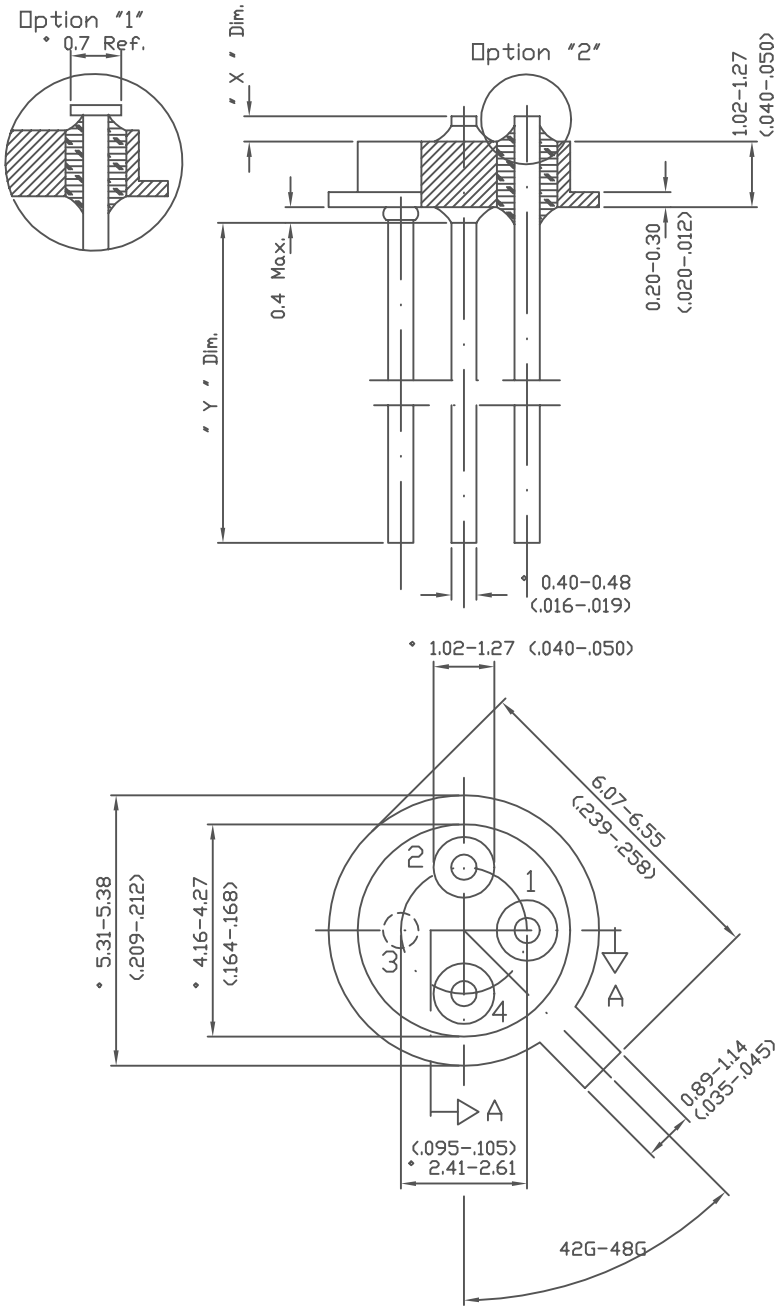

I Lett.

Ver	"X" Dim.	"Y" Dim.	Options	Leads Conf.
A	0.25-0.40	12.70-14.20	2	1-2 Thru 3 Braz.
B	0.25-0.40	16.00-16.50	2	1-2 Thru 3 Braz.
C	0.25-0.40	12.70-14.20	2	1 Thru 3 Braz.
D	0.25-0.40	12.70-14.20	2	1 Thru 3 Braz.
E	0.25-0.35	12.70-14.20	2	1-2 Thru 3 Braz.
F	0.25-0.38	12.70-14.20	2	1-2-3 Thru 4 Braz.
G	0.25-0.40	12.70-14.20	2	1-2 Thru 3 Braz.
H	0.50-0.70	12.70-14.20	1	1-2 Thru 3 Braz.
I	0.50-0.75	12.70-14.20	2	1-2 Thru 3 Braz.
L	0.25-0.40	38.10-39.62	2	1-2 Thru 3 Braz.
M	1.90-2.10	12.70-14.20	2	1-2-4 Thru 3 Braz.
N	0.50-0.75	10.85-11.15	2	1-2-3-4-Thru
O	1.06-1.20	12.70-13.70	2	1-3 Thru 2 Braz.
P	0.17-0.33	12.70-13.70	2	1 Thru 3 Braz.
Q	0.17-0.38	25.40-27.95	2	1 Thru 3 Braz.
R	0.25-0.40	12.70-14.20	2	1-3 Thru 2 Braz.
S	0.25-0.40	38.10-39.62	2	1 Thru 3 Braz.
T	0.90-1.10	12.70-14.20	2	1-2 Thru 3 Braz.
U	0.17-0.33	8.80-9.20	2	1 Thru 3 Braz.
V	0.25-0.40	12.70-14.20	1	1 Thru 3 Braz.
W	1.27-1.65	12.70-14.20	2	1-3 Thru
Y	1.90-2.10	12.70-14.20	2	1-2-3 Thru 4 Braz.
Z	0.50-0.76	12.70-14.20	1	1-2 Thru 3 Braz. No glass under n.h.
K	0.40-0.65	13.85-14.15	2	1-2-4 Thru 3 Braz.

II Lett.

Ver	Finishing
A	RAW
B	100-350 Mic. Inc. Electrolitic Ni + 50 Mic. Inc. Au
C	70 Mic. Inc. Electrolitic Ni + 50 Mic. Inc. Au
D	1.5 Mic. mm. Au
E	100-350 Mic. Inc. Electrolitic Ni +60-150 Mic.Inc. Electroless Ni + 50 Mic. Inc. Au.(no Tallio)
F	2.5 Mic. mm. Au
G	2.50-5.00 Mic. mm. Electroless Ni
H	40 Mic. Inc. Au on leads
I	Raw + Hcl
L	0.50-2.50 Mic. mm. Au. all.
M	3.00-6.00 Mic. mm. Electroless Ni plus 0.6 Mic. mm. Au
N	2.00-6.00 Mic. mm. Electroless Ni. Plus 0.60 Mic. mm. Min.
O	1.27 Mic. mm. Au Av. over 4.0-6.0 Mic. mm. electroless Ni
P	RAW - Not Tab
Q	3.00-6.00 Mic. mm. Electroless Ni plus 0.10 Mic. mm. Au

S 25 Oct 1999 Add vers. "K" I Lett.

REV	DATA REVISIONE	DESCRIZIONE VARIAZIONE
R	30 Sep 1999	Add vers. "Y"

CIE	DENOMINAZIONE TO 46 KOVAR HEADER		CODICE 4TC012
SCALA 10 : 1	MATERIALE KOVAR o EQ.		FIRMA VERIFICATORE
FIRMA DIS.	DATA EMISSIONE 27 NOV 78	ULTIMA REV. S	FIRMA CONVALIDATORE