SSM P/N CCJ06810

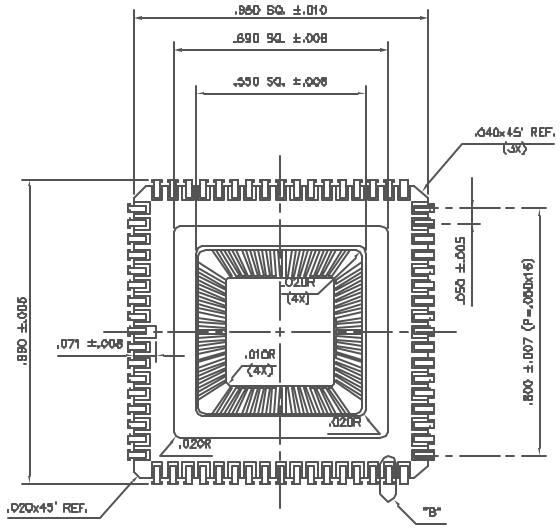

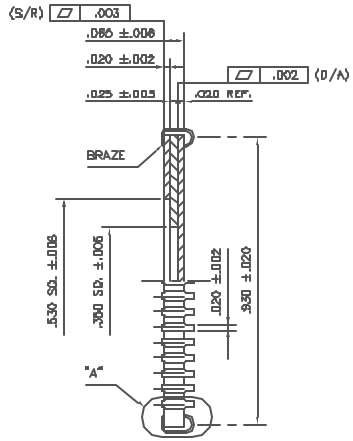

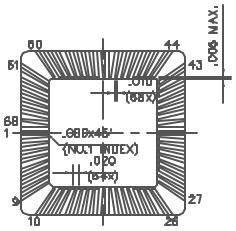

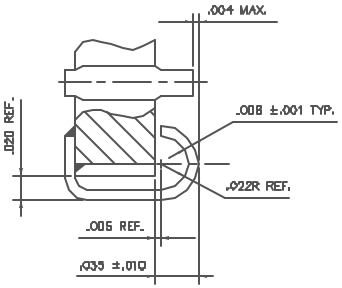

DETAIL "A"

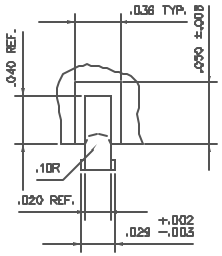

DETAIL "B"

NOTES:

1. REFERENCE 6300051
2. EQUIVALENT TO N.T.K. DWG NO. IDK68FL-2703A
3. GOLD PLATE 60μ INCHES MIN. OVER 80μ INCHES MIN. NICKEL. EXCEPT CUTING SURFACE OF LEAD.
4. NO LEAD TO BE ELECTRICALLY CONNECTED TO THE DIE ATTACH PAD. SEAL RING ISOLATED.

Qty Reqd	Part or Identifying No.	Code Ident.	Description	Material or Note	Specification or Reference Desig	Item No.
List of Materials or Parts List						

ASCO Drawn RDL	7-08-92 Date		
Check	Date	68 J-LDCC (PRE-LEADED)	
Approval	Date		
Approval	Date		
Approval	Date	CAGE Ident PQ	Size D	Drawing No. 6300447	REV NC
Approval	Date	Scale 5:1	CAD File No. 6447PKG	Sheet 1 of 1

Next Assy | Qty

Contouring Scribe Numbers 0/

Unless Otherwise Specified Dimensions Are In Inches Tolerances: .XX=±.010 .XXX=±.005 .XXXX=±.0005 Angles=±2°

REVISIONS			
LTR	DESCRIPTION	DATE	APPROVAL

SPECTRUM SEMICONDUCTOR MATERIALS, INC.

www.spectrum-semi.com Phone: 408.435.5555 Fax: 408.435.8226