SSM P/N CCJ08421

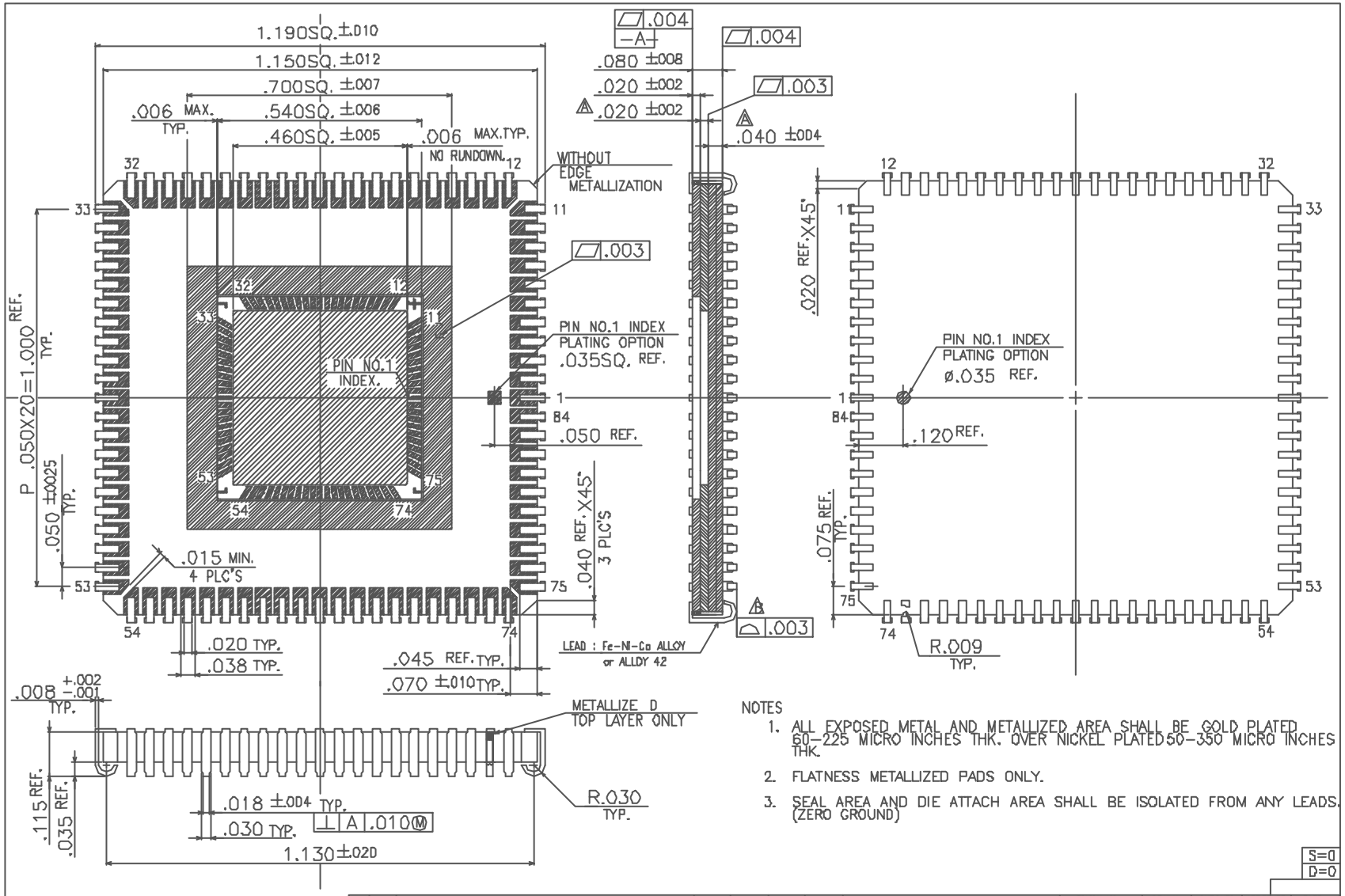

NOTES

1. ALL EXPOSED METAL AND METALLIZED AREA SHALL BE GOLD PLATED 60–225 MICRO INCHES THK. OVER NICKEL PLATED 50–350 MICRO INCHES THK.
2. FLATNESS METALLIZED PADS ONLY.
3. SEAL AREA AND DIE ATTACH AREA SHALL BE ISOLATED FROM ANY LEADS. (ZERO GROUND)

S=0
D=0

MODIFICATIONS					
B	ADDED : DIMENSION	7-26-'94	N.K	T.Y / H.M	N.K
A	CHANGED : DIMENSIONS	7-4-'89	Y.I	S.N / T.T	Y.S
	CHANGE	DATE	DRAWN	CHECKED	APPROVED

NAME (.460 SQ. CAV.) 84 J SHAPED CHIP CARRIER	TOLERANCES: UNLESS OTHERWISE SPECIFIED ± .005 THIS AREA PROHIBITS	DRAWN	CHECKED	APPROVED	DATE
SCALE 10/1	MATERIAL KYOCERA A-440	N.K	T.Y / H.M	M.K	07-26-'94
KYOCERA	KYOCERA CORPORATION KYOTO JAPAN	DRAWING NO. PB-F89299-B			SHEET 1/2

PB-F86521-A (MKO-84J) MOD.

SSM P/N CCJ08421

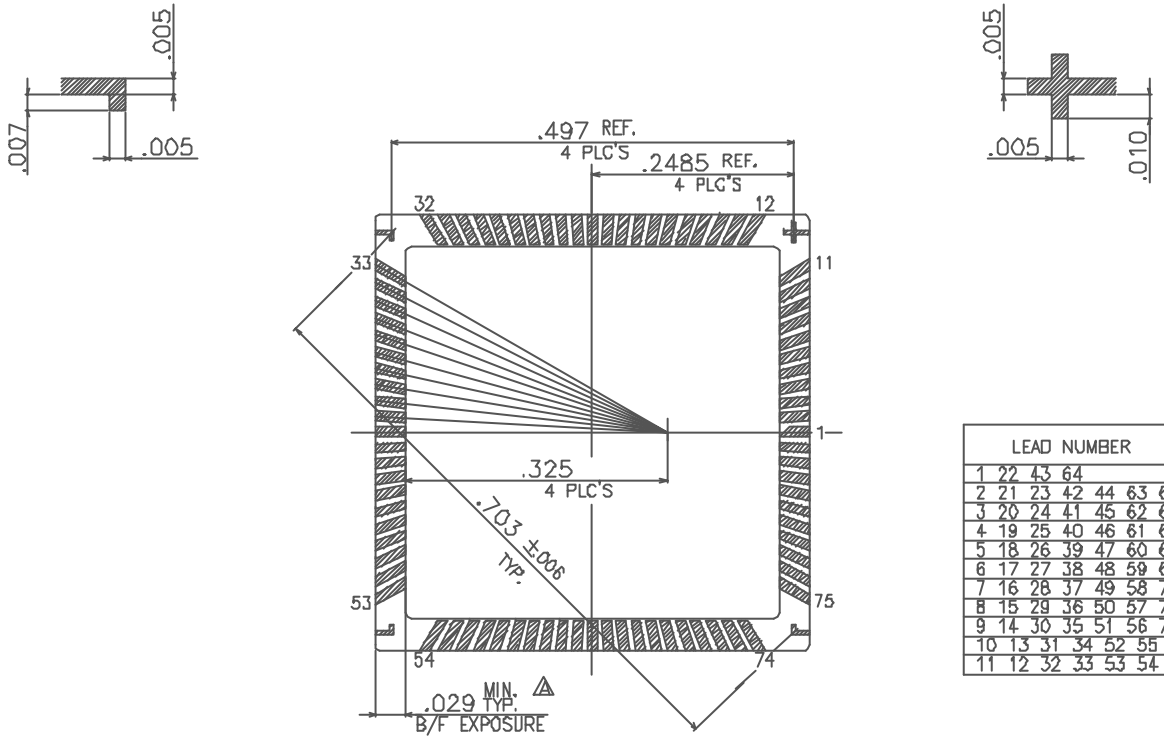

LEAD NUMBER	LEAD ANGLE	LEAD CENTER	LEAD START	LEAD END
		LEAD ORIGIN 0.3250	LEAD SPACING 0.0060	LEAD WIDTH 0.0116
1 22 43 64	0.000	0.0000	−0.0060	0.0060
2 21 23 42 44 63 65 84	3.144	0.0179	0.0121	0.0237
3 20 24 41 45 62 66 83	6.243	0.0356	0.0298	0.0414
4 19 25 40 46 61 67 82	9.329	0.0534	0.0475	0.0593
5 18 26 39 47 60 68 81	12.392	0.0714	0.0655	0.0773
6 17 27 38 48 59 69 80	15.424	0.0897	0.0837	0.0957
7 16 28 37 49 58 70 79	18.417	0.1082	0.1021	0.1143
8 15 29 36 50 57 71 78	21.362	0.1271	0.1209	0.1333
9 14 30 35 51 56 72 77	24.253	0.1464	0.1400	0.1528
10 13 31 34 52 55 73 76	27.084	0.1662	0.1597	0.1727
11 12 32 33 53 54 74 75	29.848	0.1865	0.1798	0.1932

MODIFICATIONS					
	ADDED : DIMENSION CHANGE	7-4-'89	Y.I	S.M / T.T	Y.S
		DATE	DRAWN	CHECKED	APPROVED

NAME (.460 SQ. CAV.) 84 J SHAPED CHIP CARRIER
SCALE 10/1
MATERIAL
TOLERANCES: UNLESS OTHERWISE SPECIFIED ± .005 TWO PLACE DECIMAL
DRAWN Y.IKEDA | CHECKED S.M / T.D | APPROVED Y.S | DATE 06-28-'89
KYOCERA
KYOCERA CORPORATION KYOTO JAPAN
DRAWING NO. PB−F89299−B
SHEET 2/2

SPECTRUM SEMICONDUCTOR MATERIALS, INC. www.spectrum-semi.com Phone: 408.435-5555 Fax: 408.435-8226