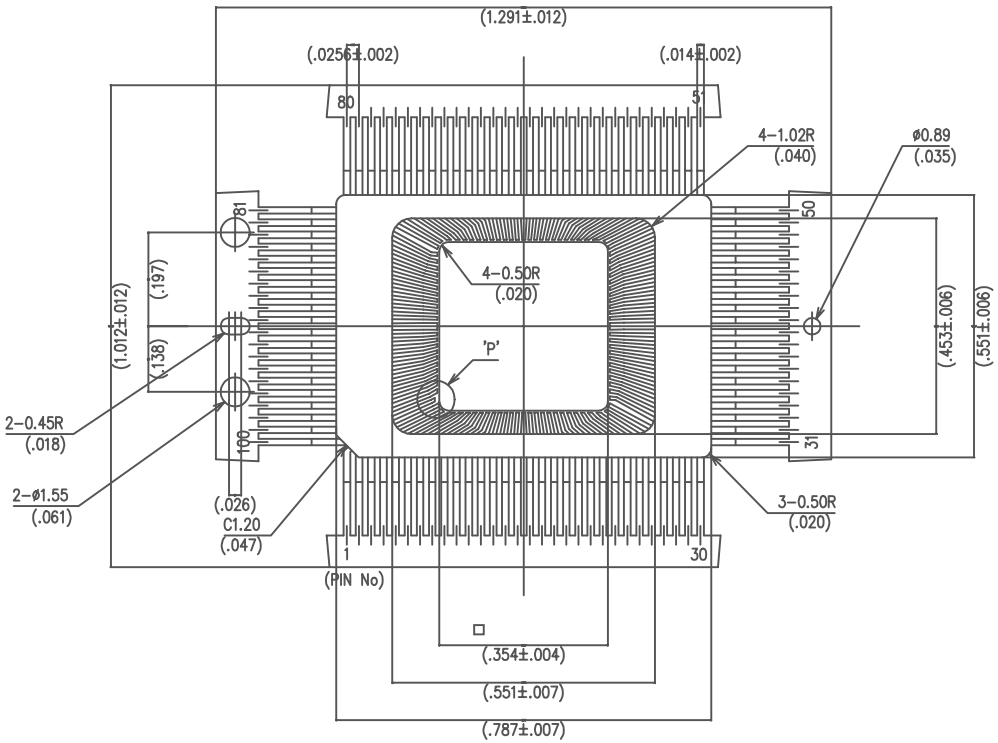

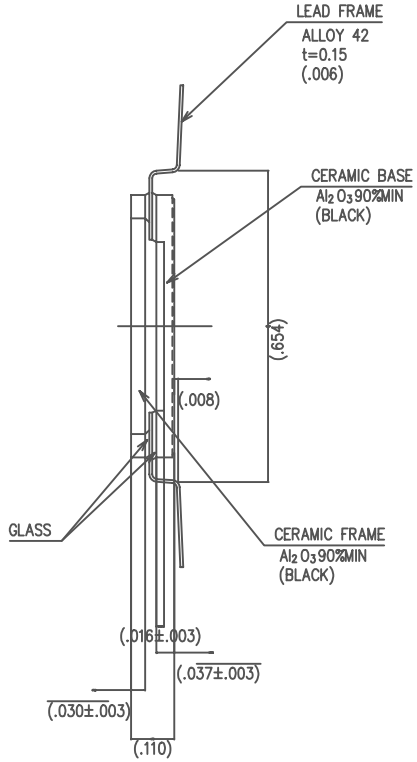

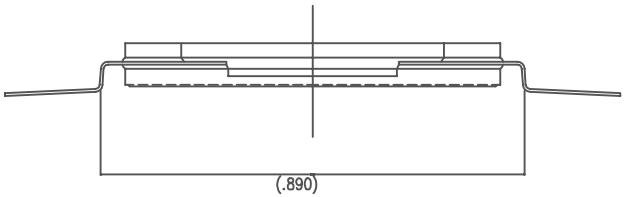

'P' DETAIL

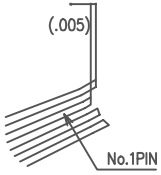

No.1PIN INDEX

MODIFICATIONS							NAME	TOLERANCES: UNLESS OTHERWISE SPECIFIED	DRAWN	CHECKED
							100LD QUAD K-PACK'Z'(8.99SQ)ID			
							SCALE 5 : 1 / MATERIAL —		APPROVED	DATE MAY.25'89
		CHANGE	DATE	DRAWN	CHECKED	APPROVED	KYOCERA CORPORATION	KYOTO JAPAN	DWG No. QC-100345-WZ	