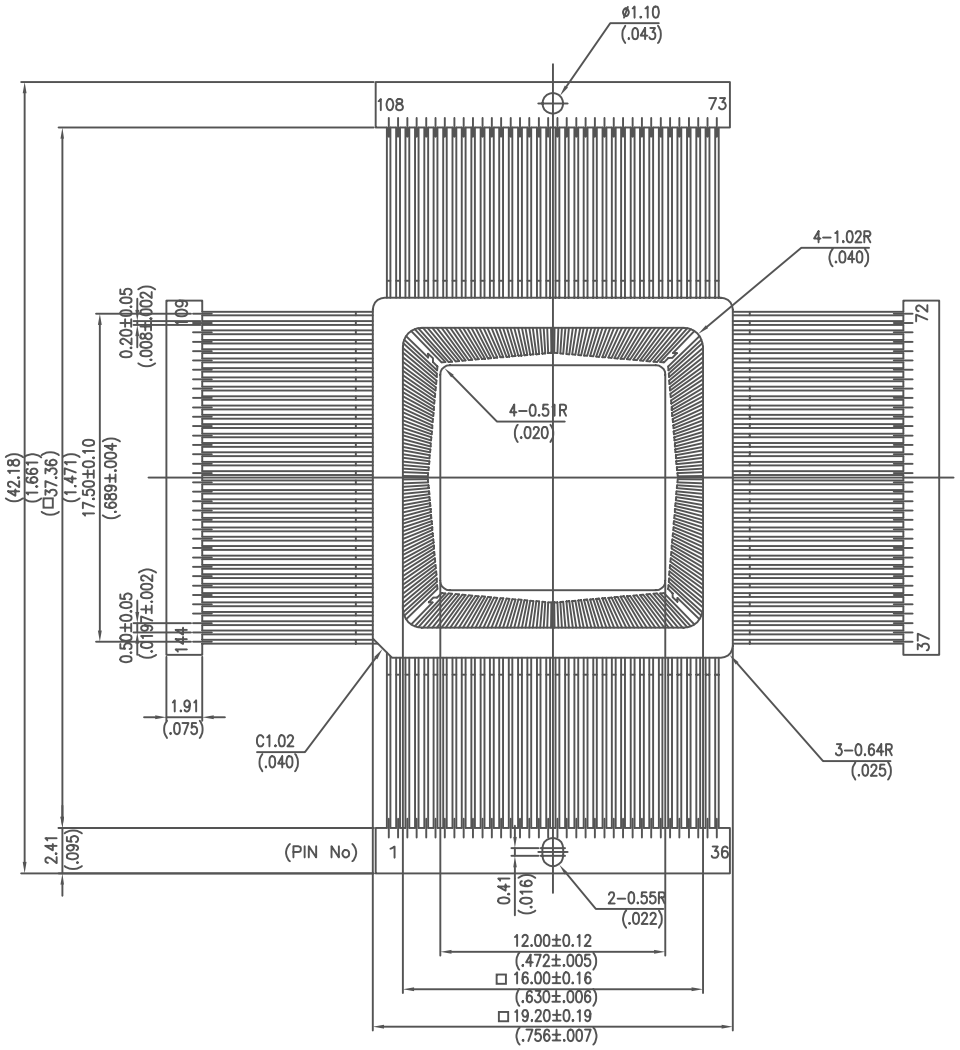

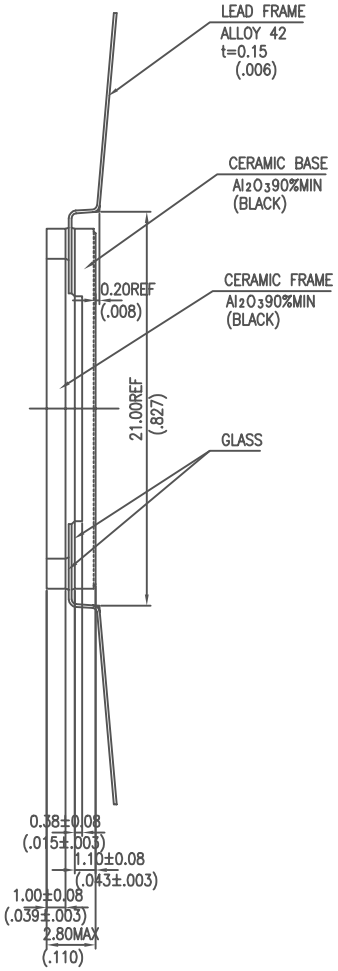

No.	ANGLE	No.	ANGLE
1	0.672 °	19	24.756 °
2	2.101 °	20	26.048 °
3	3.441 °	21	27.237 °
4	4.864 °	22	28.497 °
5	6.204 °	23	29.662 °
6	7.623 °	24	30.893 °
7	8.948 °	25	32.031 °
8	10.356 °	26	33.229 °
9	11.669 °	27	34.336 °
10	13.061 °	28	35.498 °
11	14.365 °	29	36.577 °
12	15.744 °	30	37.711 °
13	17.024 °	31	38.759 °
14	18.383 °	32	39.857 °
15	19.653 °	33	40.871 °
16	20.986 °	34	41.934 °
17	22.230 °	35	42.922 °
18	23.542 °	36	43.949 °

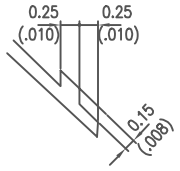

TARGET MARK
No.1,37,73,109PIN

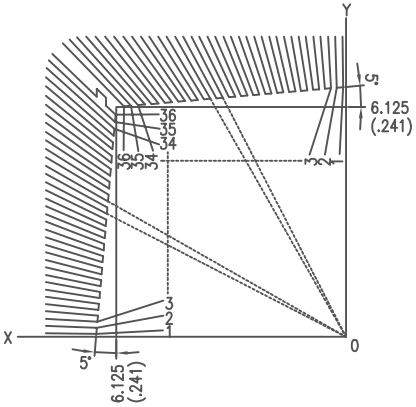

MODIFICATIONS					
	CHANGE	DATE	DRAWN	CHECKED	APPROVED

NAME
144LD QUAD K−PACK'Z'(12.0SQ)

SCALE 5 : 1

MATERIAL ——

TOLERANCES:
UNLESS OTHERWISE SPECIFIED

DRAWN | CHECKED | APPROVED | DATE APR.22'95

KYOCERA CORPORATION KYOTO JAPAN

DWG No. QC−144398−WZ