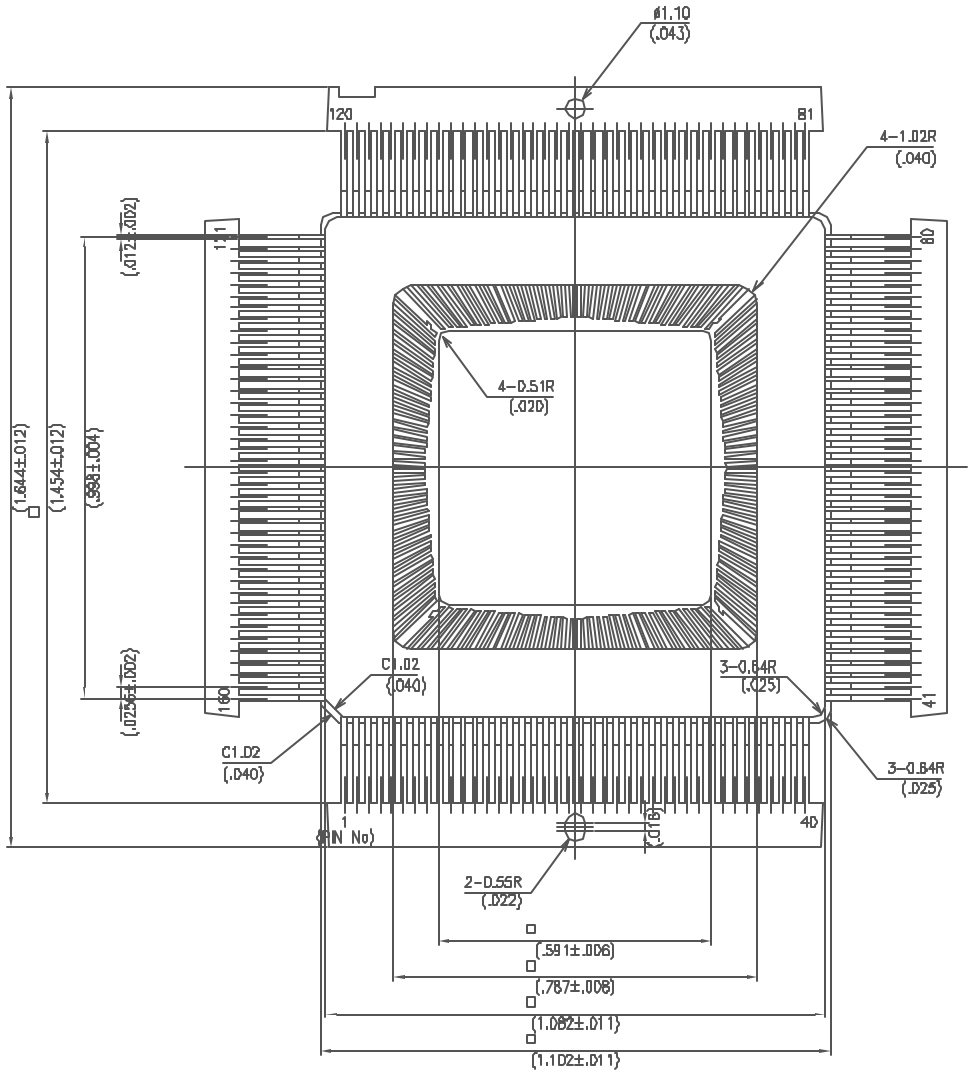

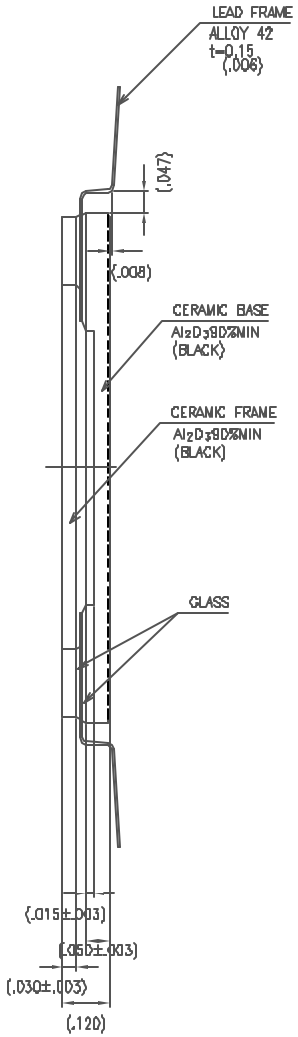

No.	ANGLE	No.	ANGLE
1	0.584 °	21	24.588 °
2	1.923 °	22	25.812 °
3	3.048 °	23	26.814 °
4	4.402 °	24	28.016 °
5	5.528 °	25	29.002 °
6	6.880 °	26	30.178 °
7	7.985 °	27	31.146 °
8	9.338 °	28	32.293 °
9	10.448 °	29	33.238 °
10	11.779 °	30	34.359 °
11	12.876 °	31	35.281 °
12	14.190 °	32	36.373 °
13	15.279 °	33	37.273 °
14	16.585 °	34	38.338 °
15	17.656 °	35	39.210 °
16	18.943 °	36	40.250 °
17	20.005 °	37	41.087 °
18	21.268 °	38	42.108 °
19	22.311 °	39	42.934 °
20	23.560 °	40	43.913 °

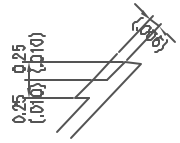

TARGET MARK
No.1, 41, 81, 121PIN

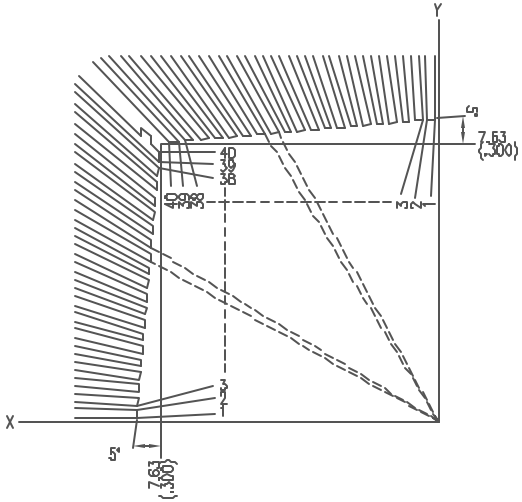

MODIFICATIONS						
		CHANGE	DATE	DRAWN	CHECKED	APPROVED

NAME
160LD QUAD K-PACK'Z'(15.0SQ)

SCALE: 5 : 1
MATERIAL: ——

TOLERANCES: UNLESS OTHERWISE SPECIFIED

DRAWN	CHECKED
APPROVED	DATE
	JUN.02'89

KYOCERA CORPORATION
KYOTO JAPAN

DWG No. QC-160321-WZ