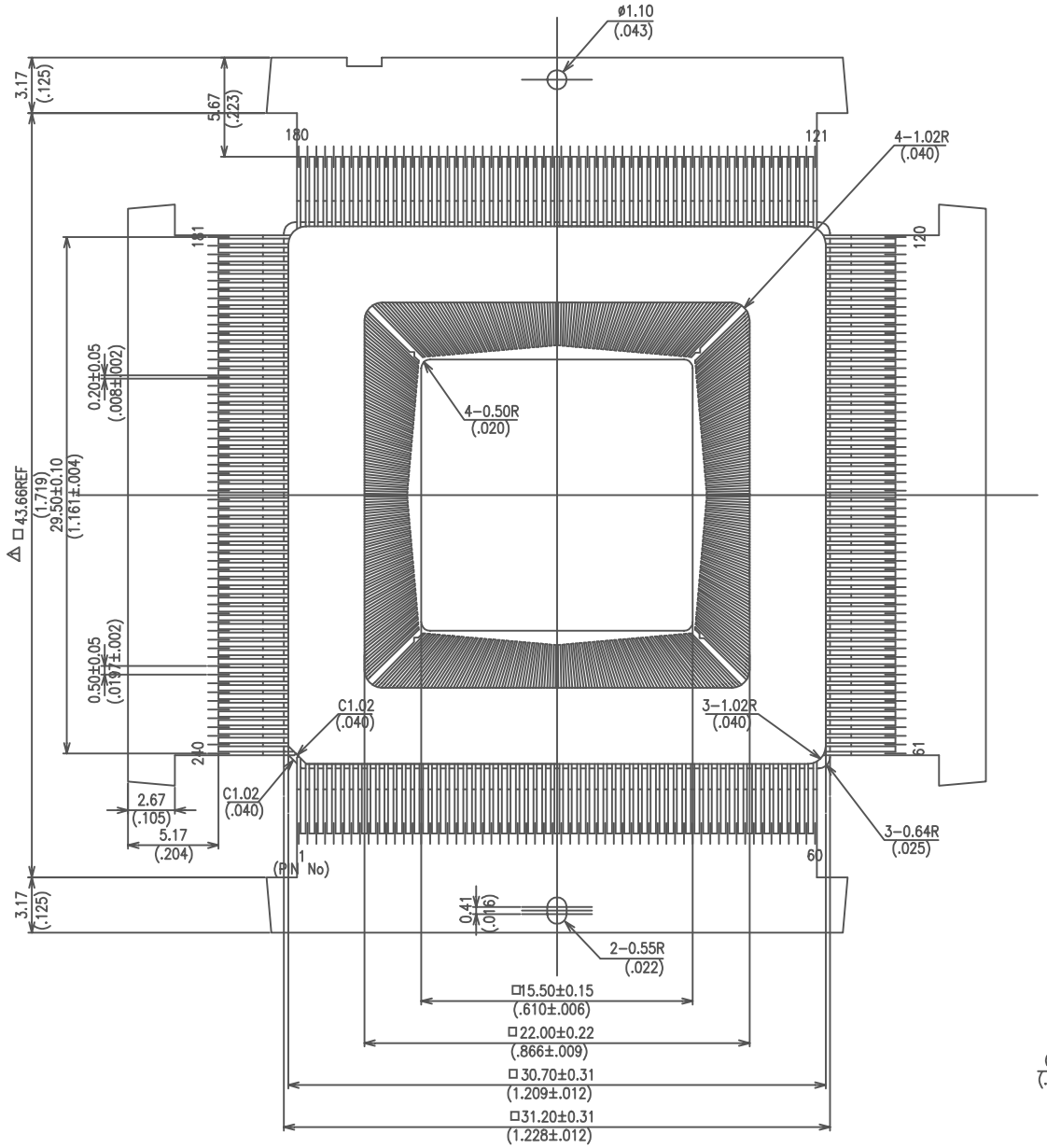

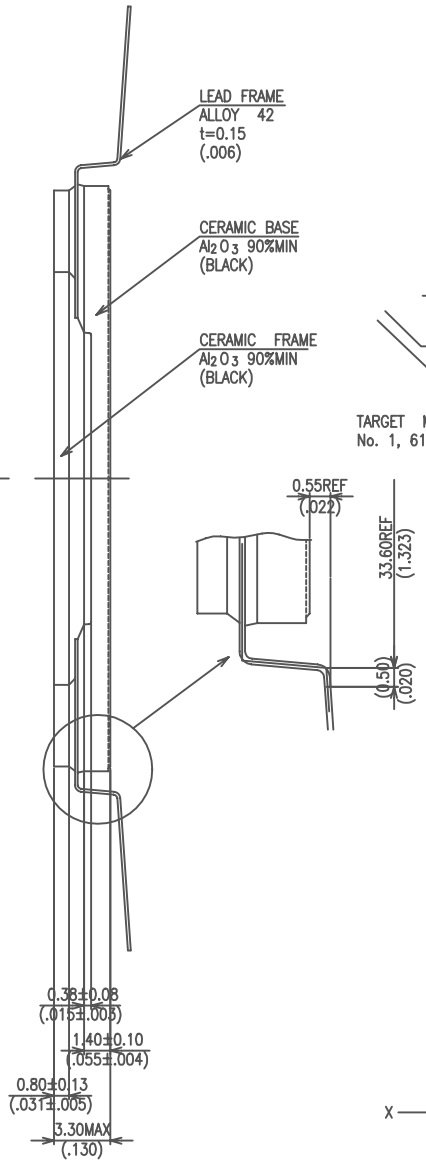

No	ANGLE	No	ANGLE
1	0.415 °	31	24.561 °
2	1.250 °	32	25.316 °
3	2.079 °	33	26.061 °
4	2.913 °	34	26.807 °
5	3.741 °	35	27.542 °
6	4.574 °	36	28.278 °
7	5.400 °	37	29.004 °
8	6.230 °	38	29.729 °
9	7.053 °	39	30.444 °
10	7.881 °	40	31.159 °
11	8.701 °	41	31.864 °
12	9.525 °	42	32.568 °
13	10.341 °	43	33.261 °
14	11.161 °	44	33.954 °
15	11.972 °	45	34.637 °
16	12.787 °	46	35.319 °
17	13.593 °	47	35.990 °
18	14.402 °	48	36.660 °
19	15.203 °	49	37.319 °
20	16.006 °	50	37.978 °
21	16.800 °	51	38.626 °
22	17.596 °	52	39.273 °
23	18.384 °	53	39.909 °
24	19.173 °	54	40.544 °
25	19.952 °	55	41.168 °
26	20.734 °	56	41.791 °
27	21.505 °	57	42.404 °
28	22.279 °	58	43.015 °
29	23.042 °	59	43.615 °
30	23.806 °	60	44.214 °

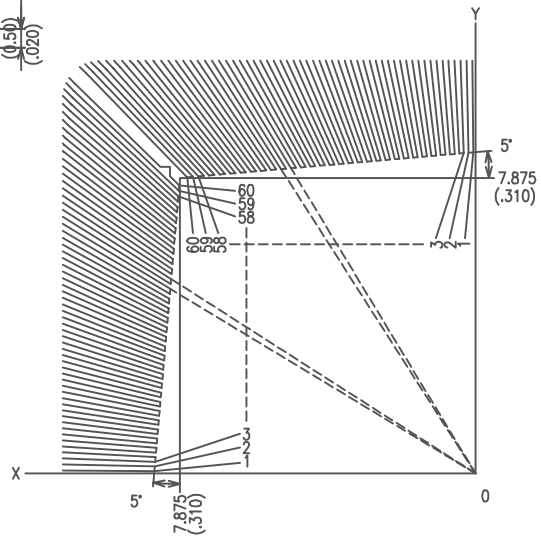

MODIFICATIONS						
	⚠	DIM CHANGED	JUN.11'93			
		CHANGE	DATE	DRAWN	CHECKED	APPROVED

NAME
240LD QUAD K-PACK 'Z'(15.5SQ)

SCALE 5:1 | MATERIAL

TOLERANCES: UNLESS OTHERWISE SPECIFIED

DRAWN K.OHTSUKA | CHECKED K.OKADA | APPROVED | DATE MAR.30 '93

KYOCERA CORPORATION KYOTO JAPAN

DWG No. QC-240326-WZ ⚠