SSM P/N CQJ04417

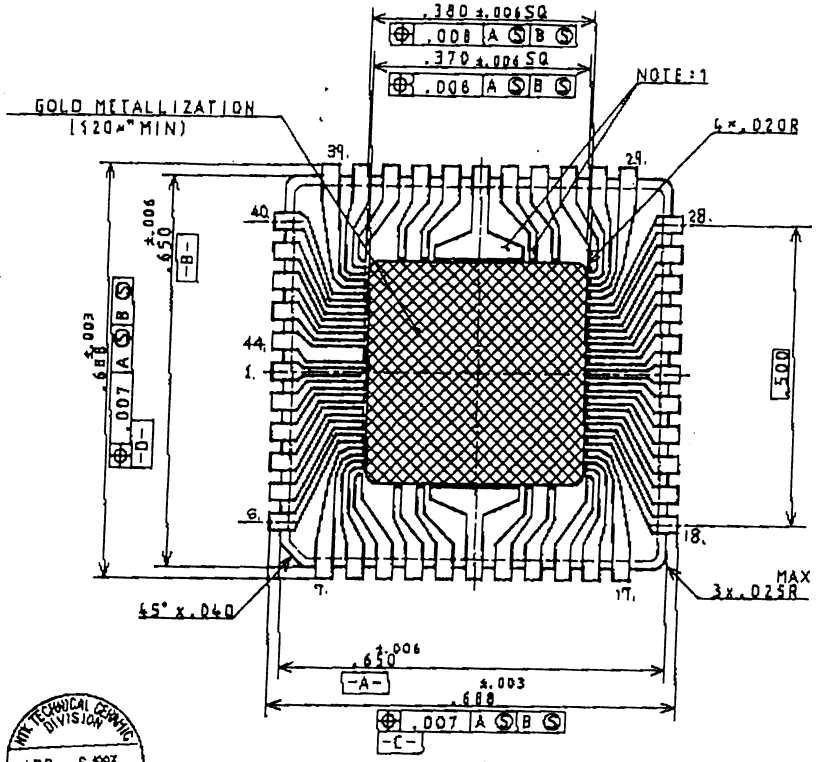

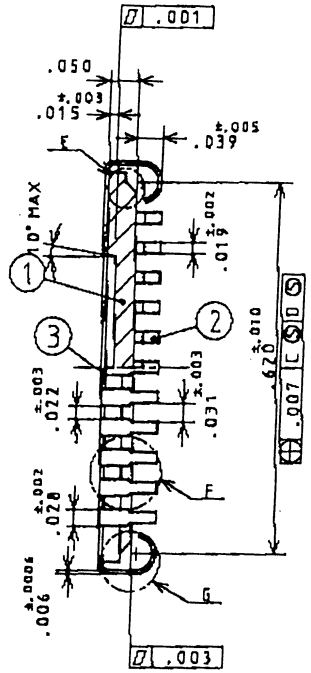

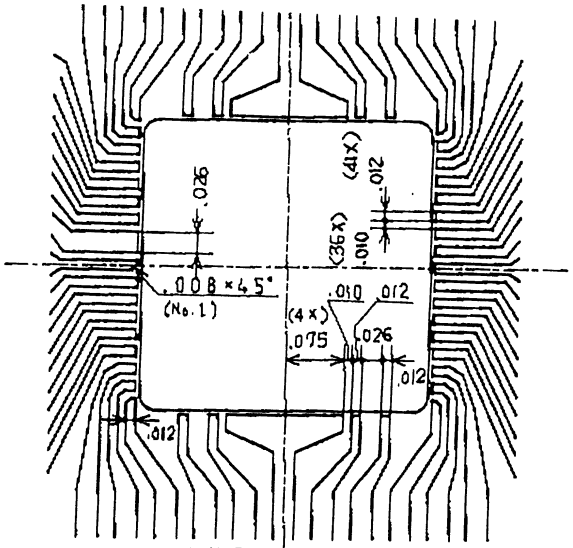

INNER LEAD DETAIL

NOTES:

1. ALUMINUM BOND PADS 100μ" THK AND 35MILS MIN IN LENGTH WITH NO PULL BACK.
2. THERE WILL BE NO UNSUPPORTED BOND PADS GREATER THAN .010.
3. ADJACENT BOND PADS MUST BE COPLANARITY WITHIN .006.
   TOTAL COPLANARITY NO GREATER THAN .010
4. THERE WILL BE NO NICKS, CUT OR GLASS IN THE BEND RADIUS.
5. NTK SPEC YS-1023 SHALL APPLY.

NTK TECHNICAL CERAMIC DIVISION
APR - 6 1993
NGK SPARK PLUG CO.,LTD.

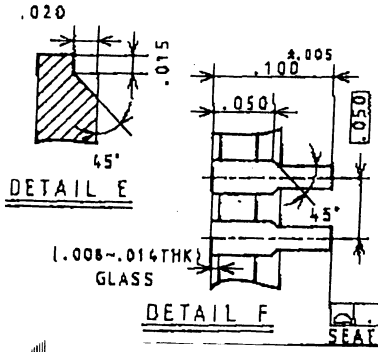

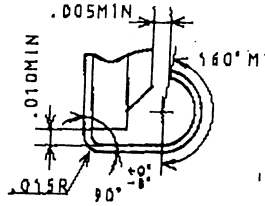

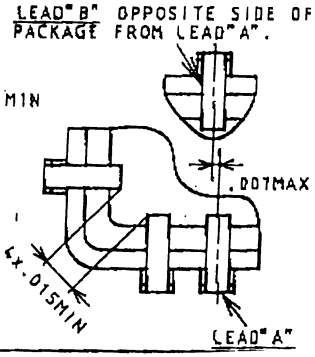

Item	Name	Material	Description
3	SOLDER GLASS	7583BF	
2	LEAD FRAME	ALLOY42	
1	CERAMIC BASE	BLACK ALUMINA	

Rev.	Description	Date
Ø	NEW DRAWING	5-11-'9

UNLESS OTHERWISE SPECIFIED TOLERANCES: ± 1 %
N.L.T. 2 DECIMALS.XX ±.01
3 DECIMALS.XXX ±.005

CUSTOMER

DRW NO.

DRAWN Y.kachi
CHECKED Y.kachi
APPROVED
UNIT INCH
SCALE

NTK TECHNICAL CERAMICS
NGK SPARK PLUG CO., LTD

TITLE (.370SQ) 44 LEAD "J" CERAMIC QUAD PK

DWG NO. L44Z0-7037A

SIZE A-

SPECTRUM SEMICONDUCTOR MATERIALS, INC.
www.spectrum-semi.com Phone: 408-435-5555 Fax: 408-435-8226