SSM P/N CQZ08005

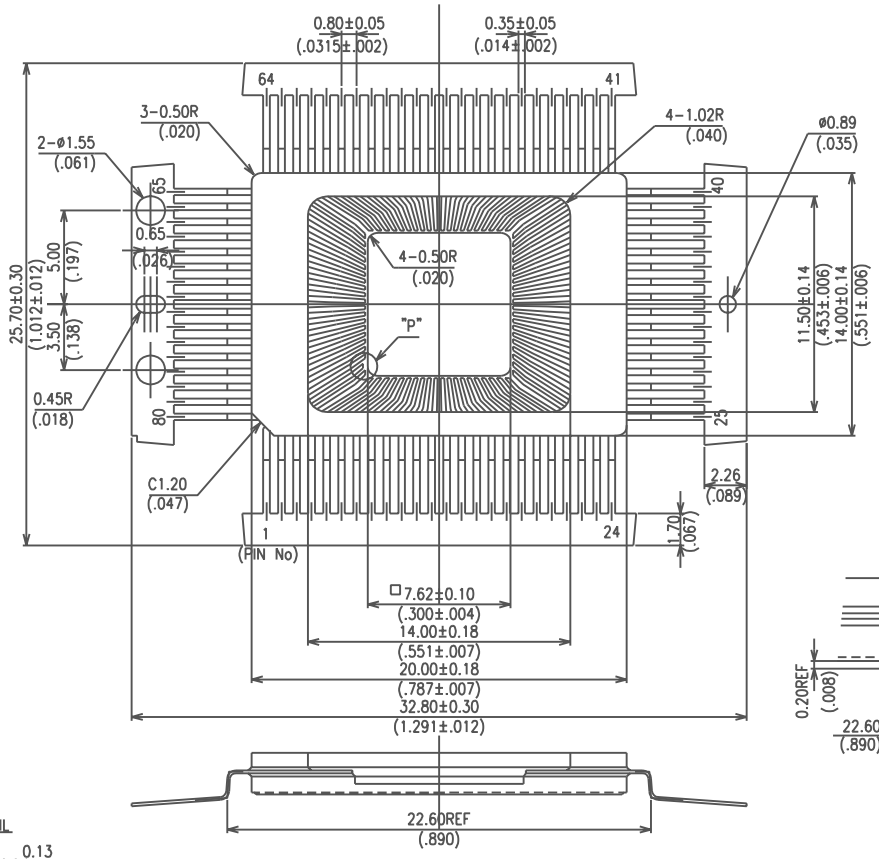

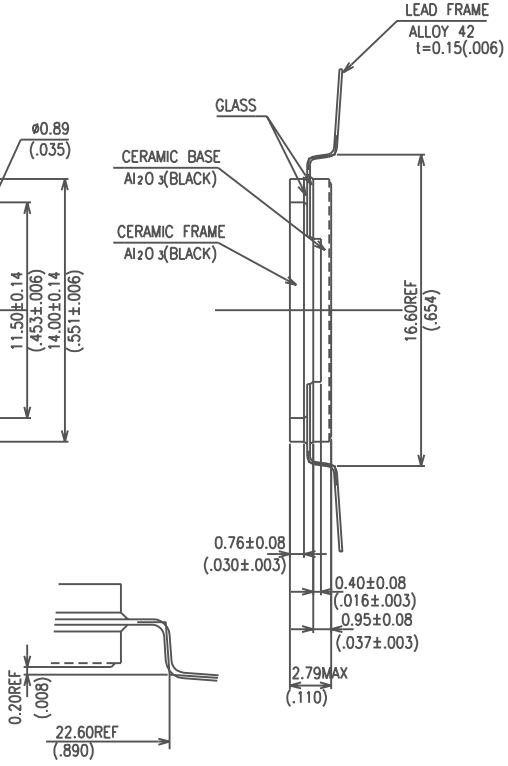

No.	ANGLE
1	1.166°
2	3.850°
3	6.164°
4	8.823°
5	11.115°
6	13.725°
7	15.976°
8	18.528°
9	20.708°
10	23.182°
11	25.289°
12	27.680°
13	29.701°
14	31.982°
15	33.919°
16	36.088°
17	37.932°
18	39.990°
19	41.733°
20	43.680°

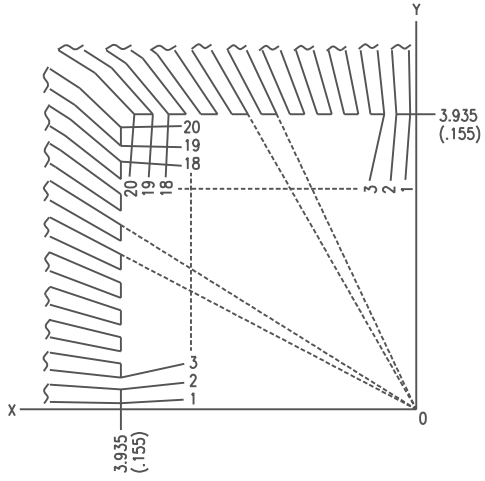

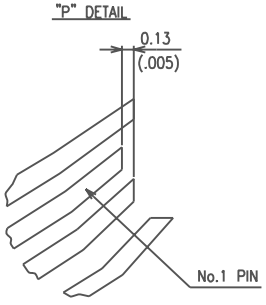

MODIFICATIONS	CHANGE	DATE	DRAWN	CHECKED	APPROVED

NAME: 80LD QUAD K-PACK'Z'(7.62SQ)

SCALE: 5 : 1 | MATERIAL: —

TOLERANCES: UNLESS OTHERWISE SPECIFIED

DRAWN | CHECKED | APPROVED | DATE: OCT.03'00

KYOCERA CORPORATION KYOTO JAPAN

DWG No. QC-080380-WZ

SPECTRUM SEMICONDUCTOR MATERIALS, INC.

www.spectrum-semi.com Phone: 408.435.5555 Fax: 408.435.8226