SSM P/NCDC00814

CONTROLLED COPY

REV. LET.	REVISION DESCRIPTION	NO.	DATE
A-3	Put on	65210	3-25-98

CONTROLLED DIST. CODE: 017-058-063

NOTES: (UNLESS OTHERWISE SPECIFIED).

[1] GLASS TYPE KCIM.

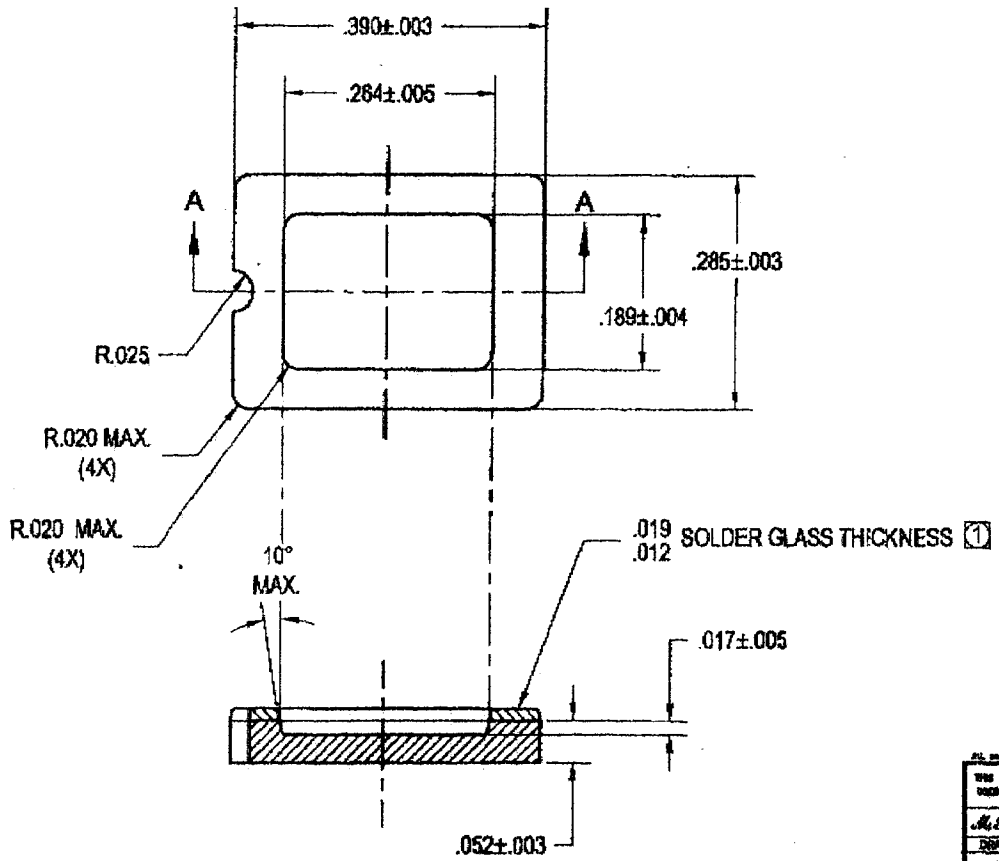

SECTION A - A

DRAWN	DATE	SHEET SIZE	CATALOG NO.
		A	8657
CHECKED	DATE	TITLE	
APP FOR PROTECTION	DATE	8 LEAD LSI CERDIP CAP "DH"	
M&SS 279			
FINISH	DATE		
BLACK ALUMINA			
MATERIAL	DATE		
M&SS 279			
SPECIFICATION	DATE	SCALE 5:1	SHEET 1 OF 1
		DWG. NO. B500282	

CDC00814