SSM P/N HDR00548

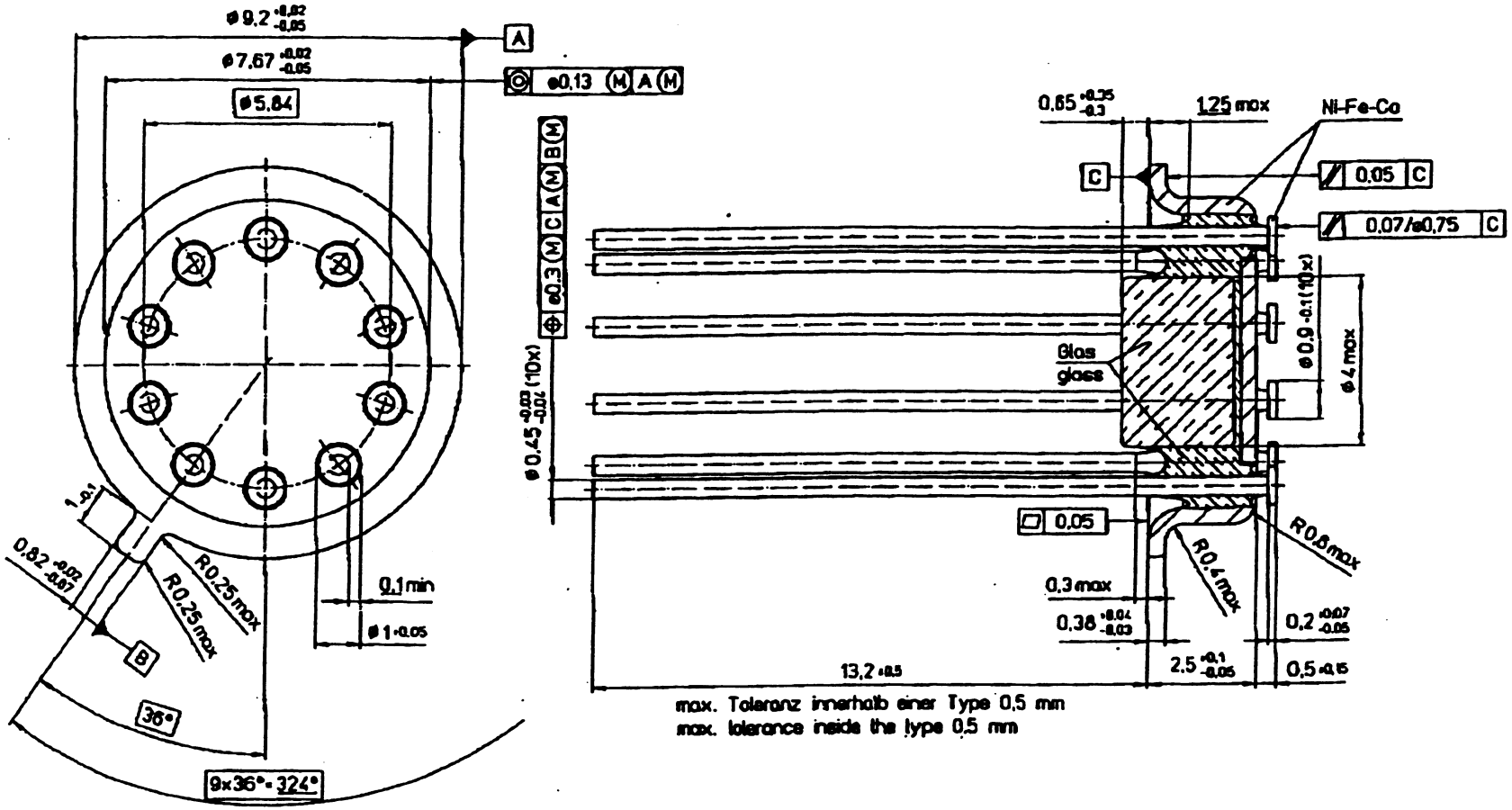

SPECTRUM SEMICONDUCTOR MATERIALS, INC.

www.spectrum-semi.com Phone: 408-435-5555 Fax: 408-435-8226