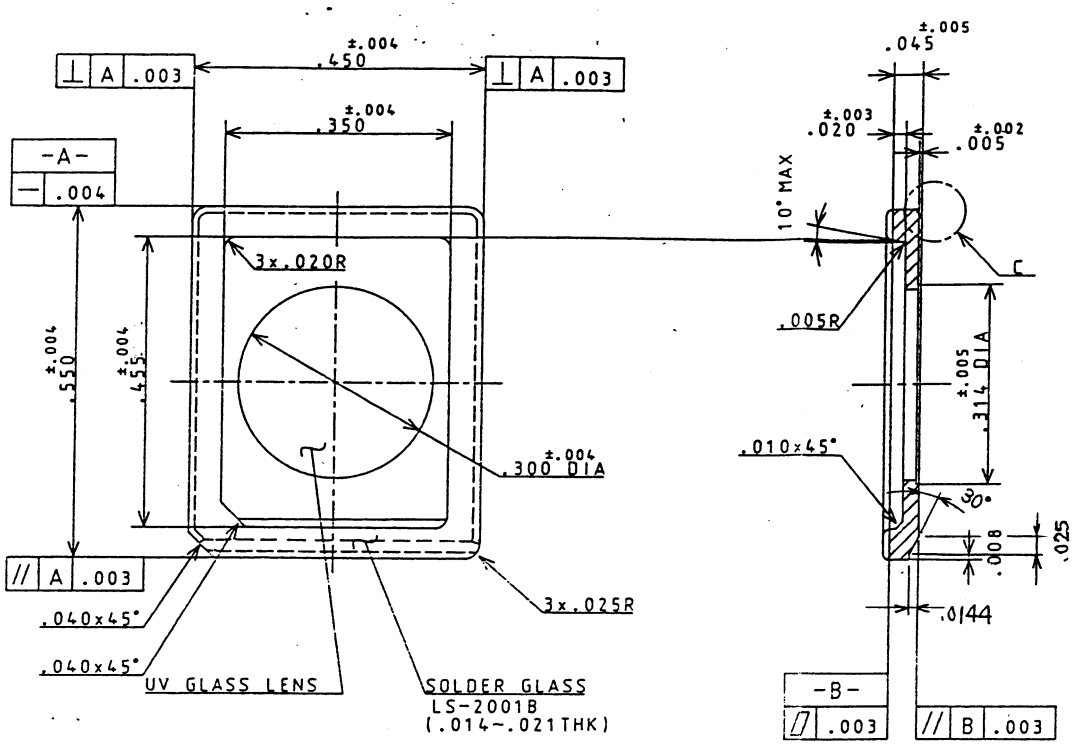

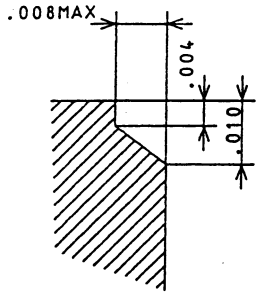

DETAIL C

DRAWING FOR APPROVAL
APPROVED BY
NTK TECHNICAL CERAMIC DIVISION

NOTES:

1. GLASS LENS TO TRANSMIT 60%MIN OF 2537Å UV LIGHT.
2. GLASS LENS PROTRUTION.

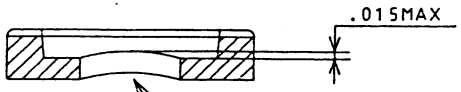

THE LENS MUST NOT PROTRUDE ABOVE THE TOP SURFACE OF THE CAP.

3. THERE WILL BE A MAX OF 5 BUBBLES OF FOREIGN MATERIAL>.005. ALLOWED IN THE AREA WITHIN .015 FROM THE OUTSIDE DIA.
4. SOLDER GLASS MOISTURE :5000PPM MAX.
5. NTK SPEC YS-1004 SHALL APPLY.

NTK TECHNICAL CERAMICS DIVISION
MAR - 4. 1991
NGK SPARK PLUG CO.,LTD.

SSM P/N CQC03203

Item	Name	Material	Description	Rev.	Description	Date
	CERAMIC	BLACK ALUMINA		ø	NEW DRAWING	3-4-'91

UNLESS OTHERWISE SPECIFIED TOLERANCES: ± 1 %
N.L.T. 2 DECIMALS.XX ±.01
3 DECIMALS.XXX±.005

DRAWN M.SASA
CHECKED Y.Yachi
APPROVED
UNIT INCH
SCALE

CUSTOMER

DRW NO. 79-0204-01

NTK TECHNICAL CERAMICS
NGK SPARK PLUG CO.,LTD

TITLE 32LEAD CERAMIC QUAD PKG EPROM CAP

DWG NO. U32-0794-41B-2L

SIZE A-3