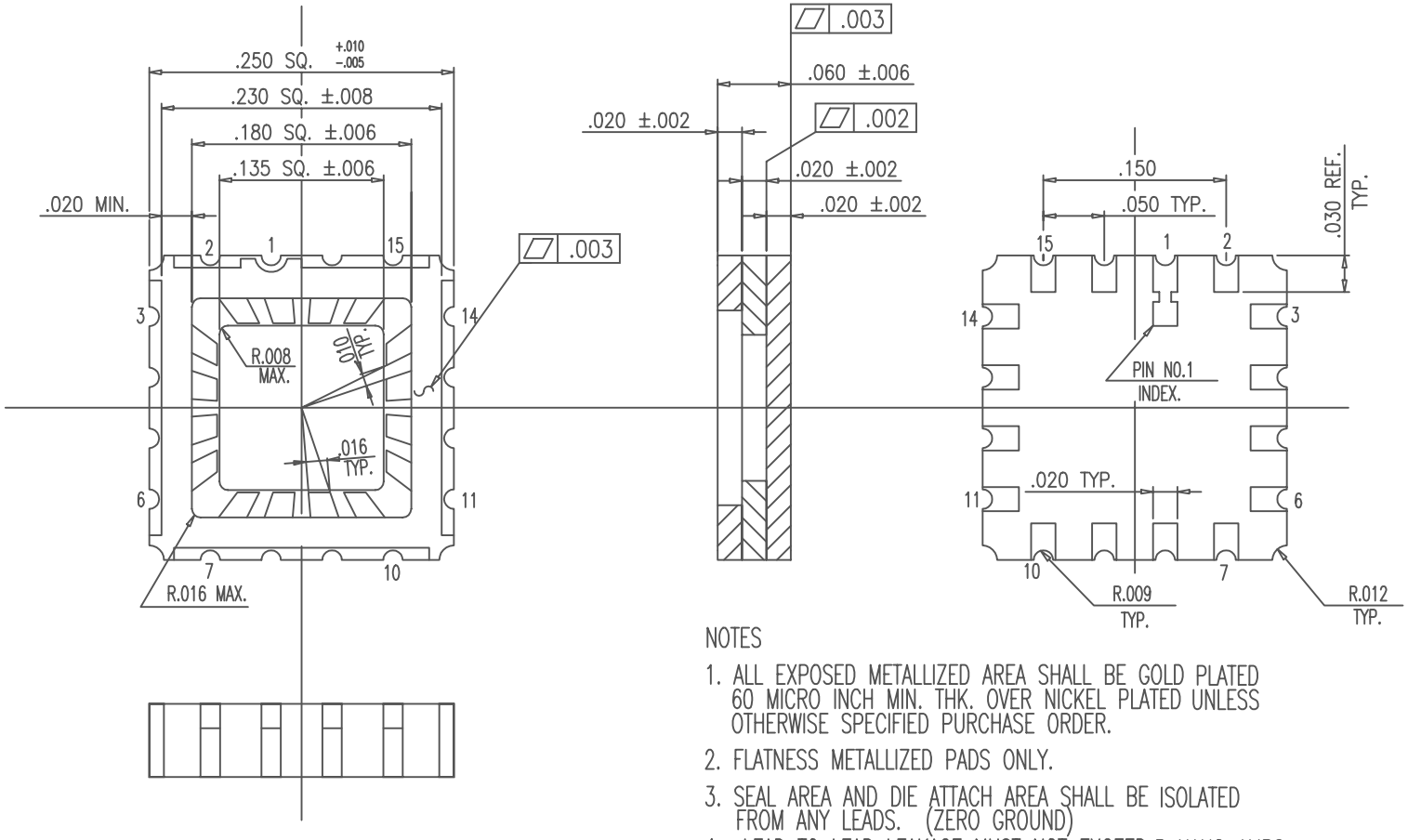

NOTES

1. ALL EXPOSED METALLIZED AREA SHALL BE GOLD PLATED 60 MICRO INCH MIN. THK. OVER NICKEL PLATED UNLESS OTHERWISE SPECIFIED PURCHASE ORDER.
2. FLATNESS METALLIZED PADS ONLY.
3. SEAL AREA AND DIE ATTACH AREA SHALL BE ISOLATED FROM ANY LEADS. (ZERO GROUND)
4. LEAD TO LEAD LEAKAGE MUST NOT EXCEED 5 NANO AMPS AT 100V D.C
5. LEAD RESISTANCE 0.3 Ω MAX.

MODIFICATIONS				
CHANGE	DATE	DRAWN	CHECKED	APPROVED

NAME 16 LCC (HBO-16C)

SCALE 10/1

MATERIAL KYOCERA A-440

TOLERANCES: UNLESS OTHERWISE SPECIFIED ± 1 % N.L.T. ± .005

KYOCERA

KYOCERA CORPORATION KYOTO JAPAN

S=0 D=0

HBO-16C

DRAWN	CHECKED	APPROVED	DATE
S.M	UE. K.H	M.S	MAR.16.'99

DRAWING NO. PB-C85194

SHEET 1/1