NTK TECHNICAL CERAMICS

LATEST REVISION'S	DESCRIPTION
A	CHG TOP CAVITY TOL ±.006 WAS ±.008

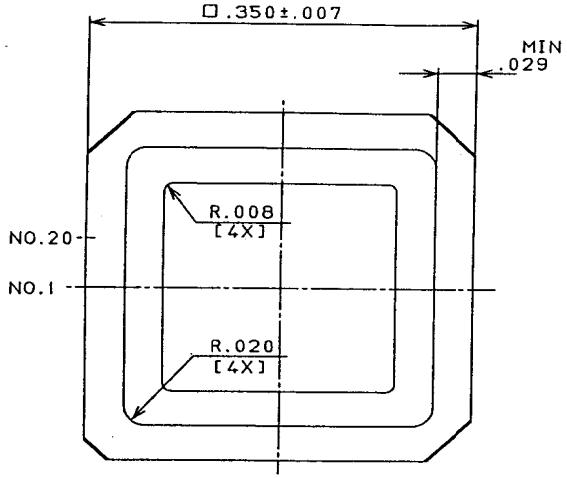

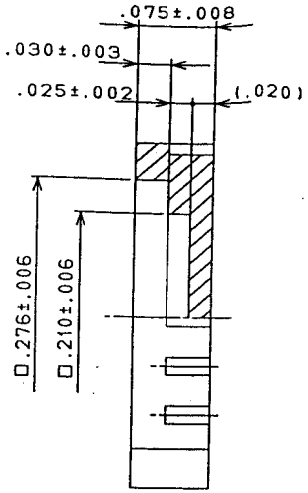

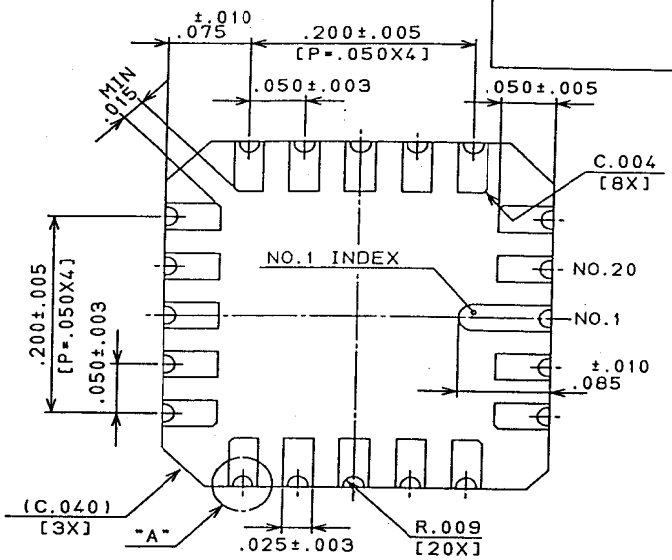

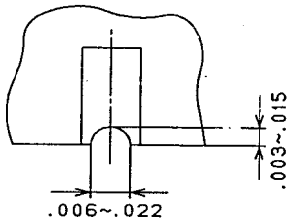

DETAIL "A"

NOTES:

1. GOLD PLATE 100μ~250μ INCHES 80μ~225μ INCHES NICKEL.

2. NO LEAD TO BE ELECTRICALLY CONNECTED TO THE DIE ATTACH. SEAL RING ISOLATED.

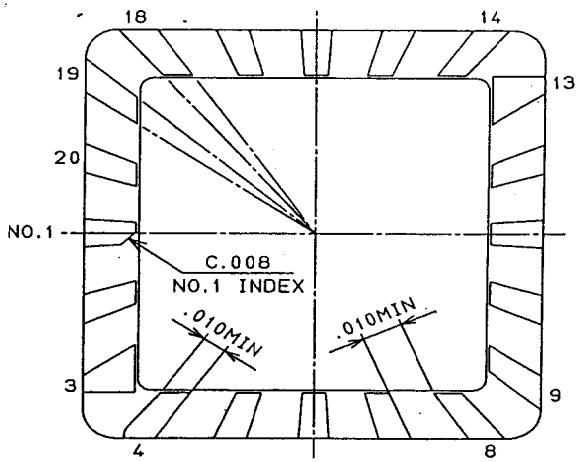

B/G PADS DETAIL

NTK SEMICONDUCTOR COMPONENTS DIVISION 9 NGK SPARK PLUG CO.,LTD.

Item	Name	Material	Description
3			
2			
1	CERAMIC	BLACK ALUMINA	

Rev.	Description	Date
A	REDRAWING	JUL.-04-1995
Φ	NEW DRAWING	APR.-13-1995

UNLESS OTHERWISE SPECIFIED
TOLERANCES: ± 1%
N. L. T. 2 DECIMALS. XX ± .01
3 DECIMALS. XXX ± .005

CUSTOMER

DWG NO.

DRAWN J.WASHINO
CHECKED
APPROVED
UNIT INCH
SCALE

NTK TECHNICAL CERAMICS
NGK SPARK PLUG CO., LTD

TITLE 20 LEAD CHIP CARRIER

DWG NO. IRK20F1-5856B

SIZE A-2 (C)

MODIFIED DWG NO.

PART NO.

SHEET 1 OF 1