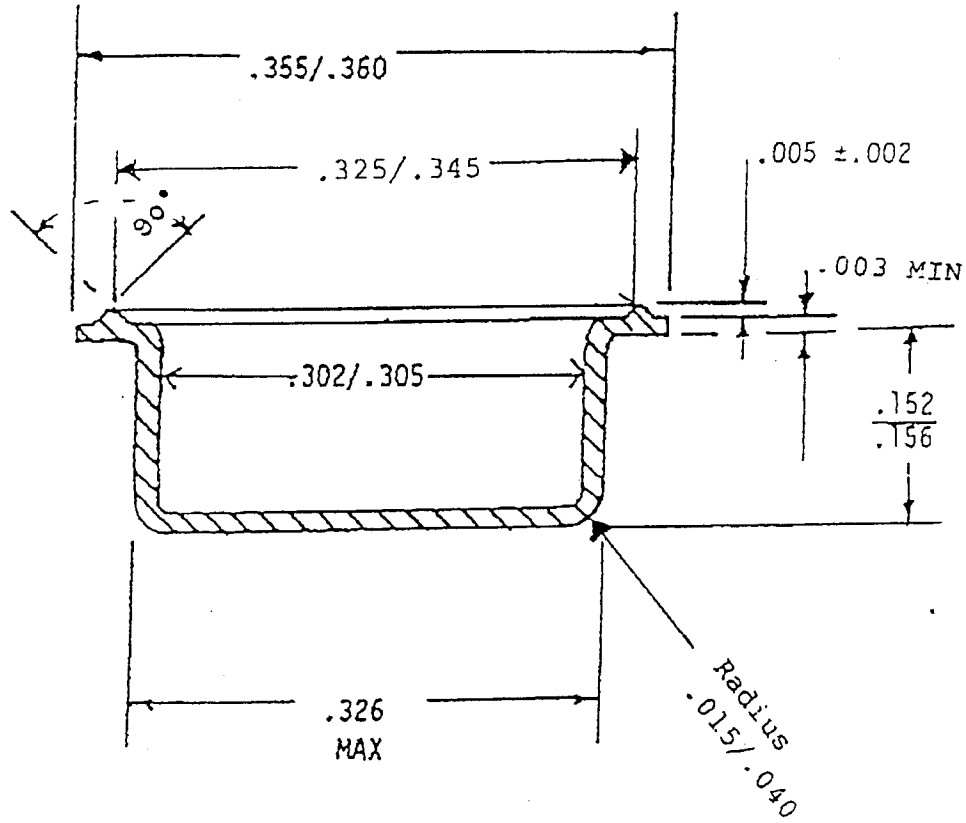

Stock Thickness: .010

CAN00502 .165" Ht. With Weld Projection
Mfr. T&M No. 6978CF