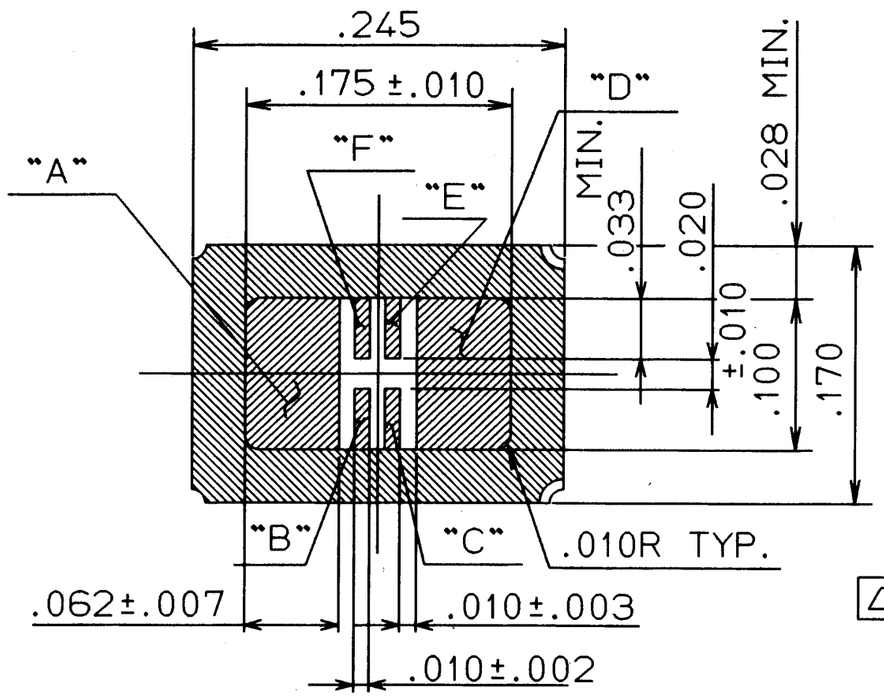

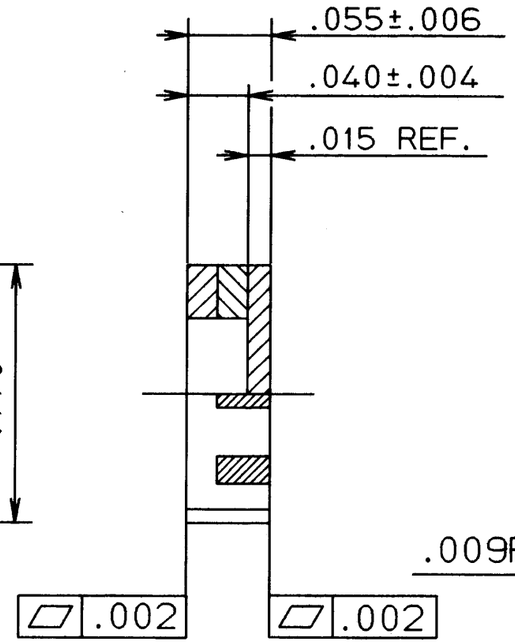

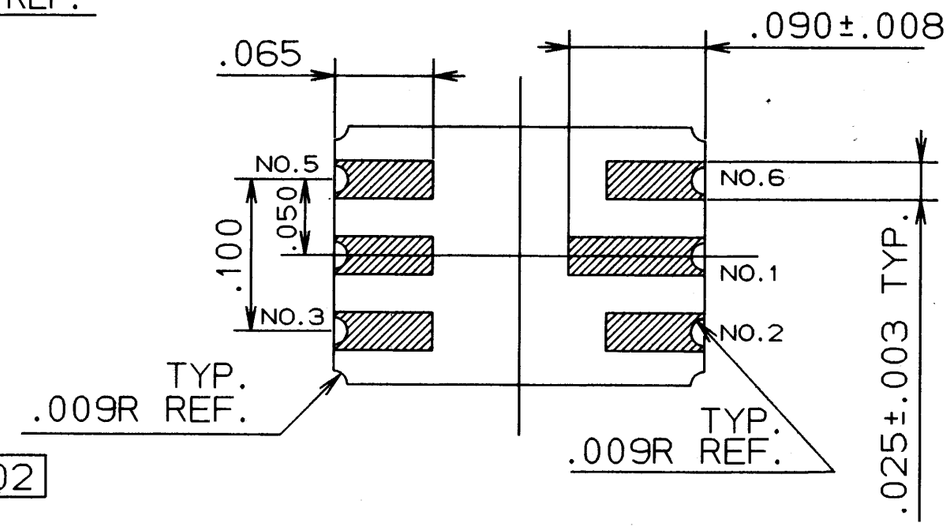

THIS METALLIZATION TO BE
ELECTRICALLY CONNECTED TO THE SEAL RING.
(2 PLCS.)

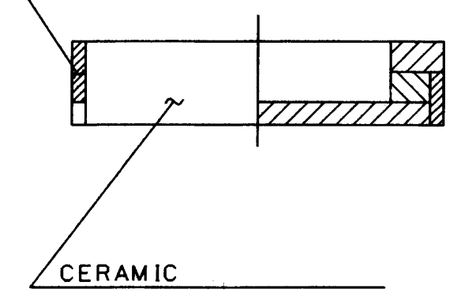

CERAMIC
KYOCERA A440(BLACK)

NOTES

1. PLATING THICKNESS TO BE PER CUSTOMER'S SPECIFICATION.
2. SEAL AREA TO BE METALLIZED.
3. SEAL RING TO BE FLOATING FROM ANY PADS.
4. ELECTRICALLY CONNECTED
   PAD "A" TO PIN NO.1
   PAD "B" TO PIN NO.2
   PAD "C" TO PIN NO.3
   PAD "D" TO PIN NO.4
   PAD "E" TO PIN NO.5
   PAD "F" TO PIN NO.6

VBE06AC364-1 S=0 D=✱

MODIFICATION					
	CHANGED	DATE	DRAWN	CHECKED	APPROVED

NAME	TOLERANCE UNLESS OTHERWISE SPECIFIED	DRAWN	CHECKED	APPROVED	DATE
6 LEAD CHIP CARRIER		S.SE	H.T / M.M	T.A	APR.08.'94
SCALE 10/1 — MATERIAL AS INDICATED	±.005 THIRD ANGLE PROJECTION	S.Seto	H.Tsuke / M.Muta	T.Azu	

KYOCERA — KYOCERA CORPORATION KYOTO JAPAN

DRAWING NO. KD-V94364 — SHEET 1/1