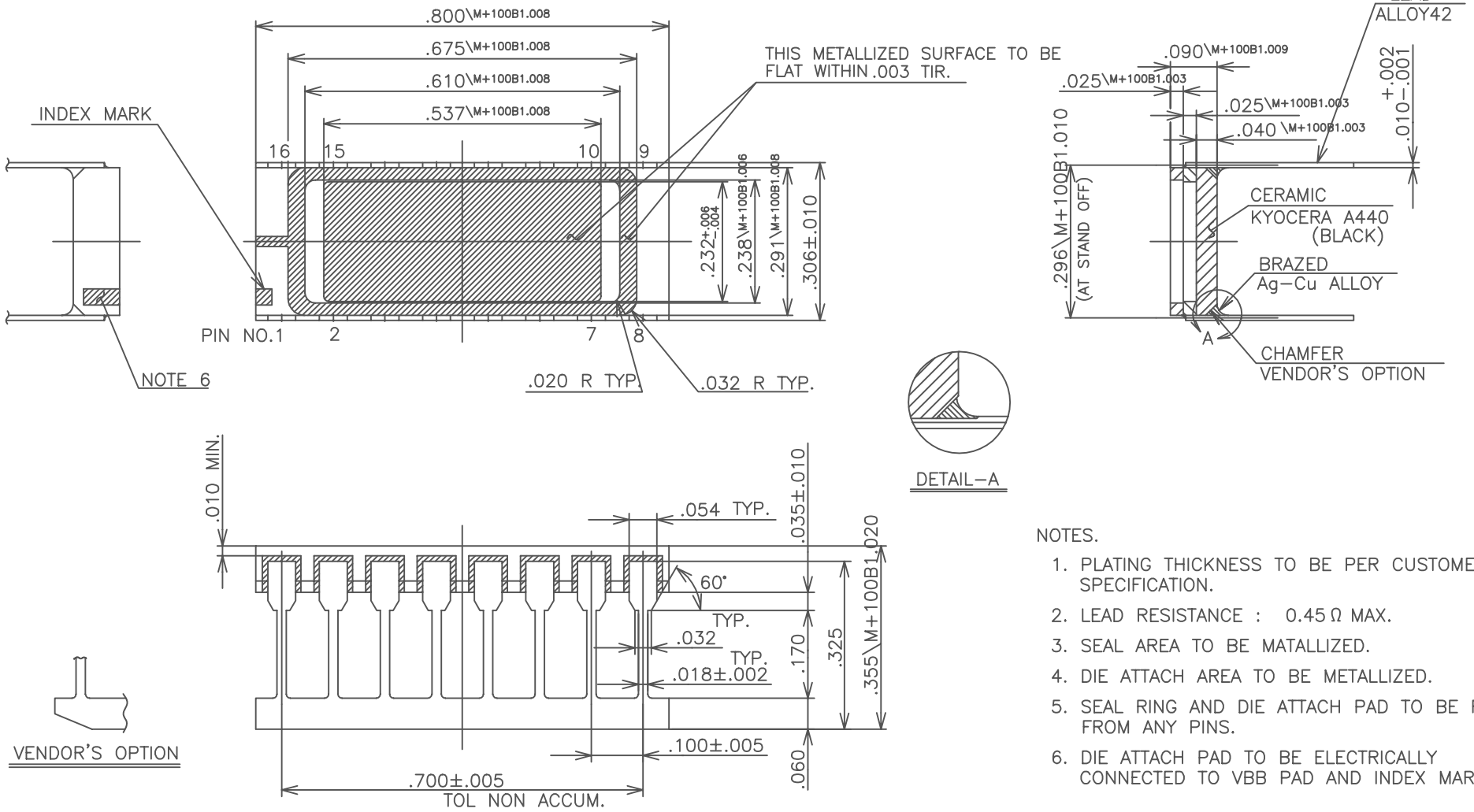

NOTES.

1. PLATING THICKNESS TO BE PER CUSTOMER'S SPECIFICATION.
2. LEAD RESISTANCE : 0.45 Ω MAX.
3. SEAL AREA TO BE MATALLIZED.
4. DIE ATTACH AREA TO BE METALLIZED.
5. SEAL RING AND DIE ATTACH PAD TO BE FLOATING FROM ANY PINS.
6. DIE ATTACH PAD TO BE ELECTRICALLY CONNECTED TO VBB PAD AND INDEX MARK.

MODIFICATION						
A	CONVERTED CAD DATA	JAN.31.'00	T.K / M.SU	H.TA / S.K	H.SA	
	CHANGED	DATE	DRAWN	CHECKED	APPROVED	

NAME 16 LEAD SIDE BRAZED PACKAGE		TOLERANCE UNLESS OTHERWISE SPECIFIED ±.005 THIRD ANGLE PROJECTION	SB016P735-1	S=0 D=0	
SCALE 5/1	MATERIAL AS INDICATED		DRAWN S.F	CHECKED T.A	APPROVED	DATE OCT.29.'84
KYOCERA	KYOCERA CORPORATION KYOTO JAPAN		DRAWING NO. KD-84735-A			SHEET 1/2

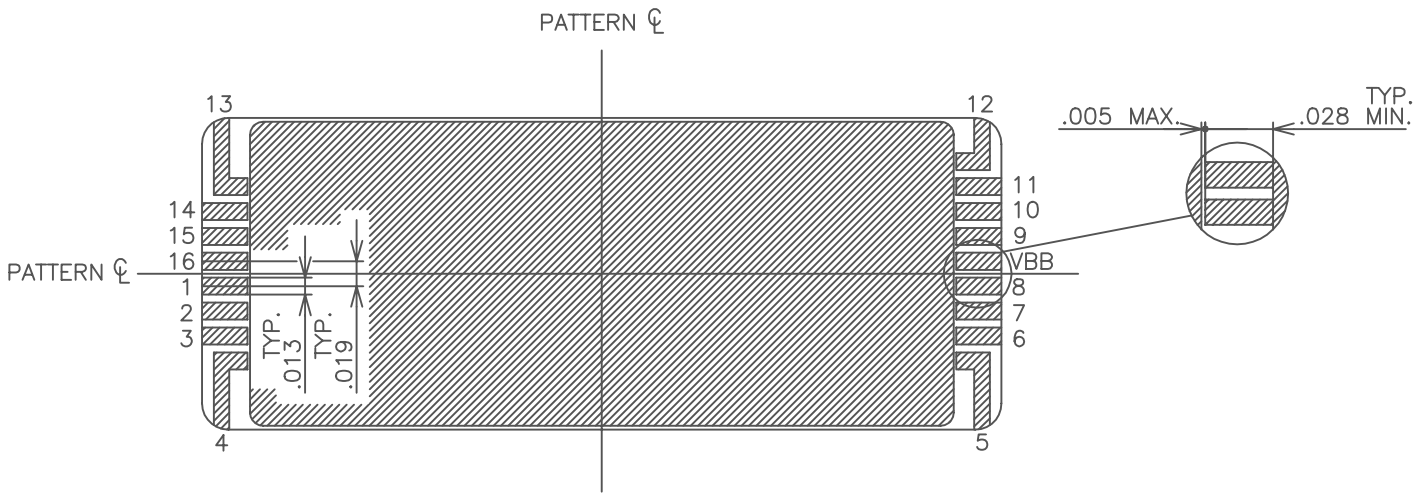

BONDING PATTERN

MODIFICATION														
						NAME 16 LEAD SIDE BRAZED PACKAGE	TOLERANCE UNLESS OTHERWISE SPECIFIED	DRAWN	CHECKED	APPROVED	DATE
								S.F	T.A		OCT.29.'84
						SCALE 10/1	MATERIAL ———	——— THIRD ANGLE PROJECTION			
						KYOCERA	KYOCERA CORPORATION KYOTO JAPAN	DRAWING NO. KD-84735-A			SHEET 2/2
	CHANGED	DATE	DRAWN	CHECKED	APPROVED						